# MX31-BS0 Quick Reference Guide/ 快速测试参考指南

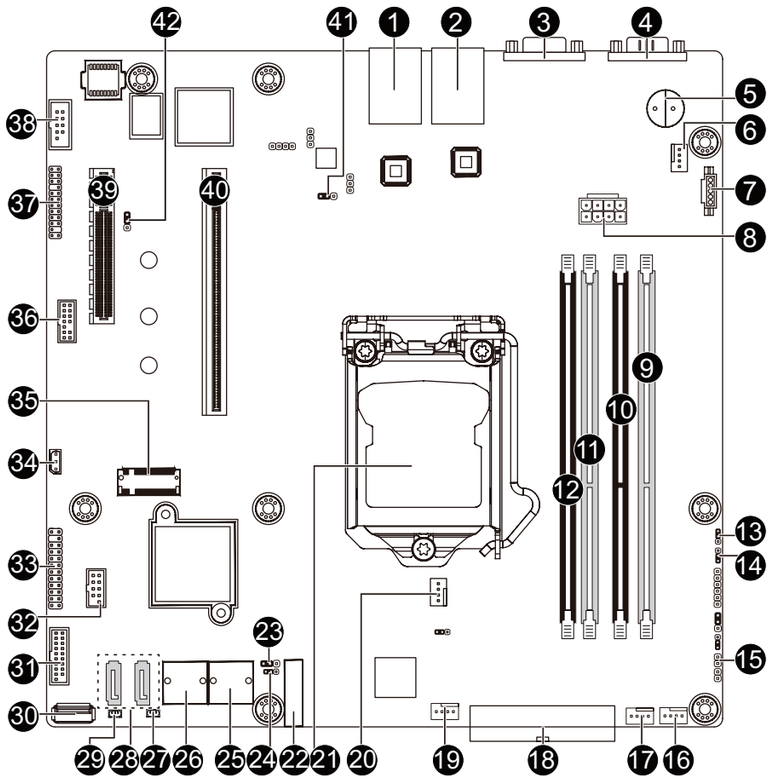

| No. | Code | Description |
|---|---|---|
| 1 | USB3_LAN1 | LAN port #1 (top) / USB 3.0 ports (bottom) |
| 2 | USB2_LAN2 | LAN port #2 (top) / USB 2.0 ports (bottom) |
| 3 | VGA_1 | VGA port |
| 4 | COM1 | Serial port |
| 5 | BUZZER1 | Buzzer |
| 6 | SYS_FAN1 | System fan connector# |
| 7 | PMBUS | PMBus connector |
| 8 | P2 | 8 pin power connector (for CPU) |
| 9 | DIMM_P0_B1 | Channel 2 slot 1 |
| 10 | DIMM_P0_B0 | Channel 2 slot 0 |
| 11 | DIMM_P0_A1 | Channel 1 slot 1 |
| 12 | DIMM_P0_A0 | Channel 1 slot 0 |
| 13 | BIOS_RCVR | BIOS recovery jumper |
| 14 | ME_RCVR | ME recovry jumper |
| 15 | CASE_OPEN | Case open intrusion alert header |
| 16 | SYS_FAN4 | System fan connector#4 |
| 17 | SYS_FAN3 | System fan connector#3 |
| 18 | P1 | 24 pin main power connector |
| 19 | SYS_FAN2 | System fan connector#2 |
| 20 | CPU_FAN | CPU fan connector |
| 21 | CPU0 | Intel LGA1151 Socket H4 |
| 22 | BAT | Battery socket |
| 23 | CLR_CMOS | Clear CMOS jumper |
| 24 | BIOS_PWD | Clearing Supervisor Password jumper |
| 25 | SATA_0_1 | SATA 3 6Gb/s connectors |
| 26 | SATA_2_3 | SATA 3 6Gb/s connectors |
| 27 | SATA_DOM4 | SATA port 4 DOM power connector |
| 28 | SATA4/SATA5 | SATA 3 6Gb/s connectors (Supports SATA DOM) header |
| 29 | SATA_DOM5 | SATA port 5 DOM power connector |
| 30 | USB_A1 | Type A USB 2.0 connector |
| 31 | F_USB3_1 | USB 3.0 header |
| 32 | F_USB1 | USB 2.0 header |
| 33 | FP_1 | Front panel header |
| 34 | IPMB | IPMB connector |
| 35 | M2_MKEY | M.2 slot (Dimension: 2280) |
| 36 | TPM | TPM module connector |
| 37 | BP_1 | HDD back plane board header |
| 38 | COM2 | Serial port cable connector |
| 39 | PCIE_1 | PCI Express x8 slot |
| 40 | PCIE_2 | PCI Express x16 slot |
| 41 | ME_UPDATE | ME update jumper |
| 42 | S3_MASK | S3 Power On Select jumper |

## ATX Power/ 电源

24 13 / 12 1

| No. | Pin Define | No. | Pin Define |
|---|---|---|---|
| 1 | 3.3V | 13 | 3.3V |
| 2 | 3.3V | 14 | -12V |
| 3 | GND | 15 | GND |
| 4 | +5V | 16 | PS_ON |
| 5 | GND | 17 | GND |
| 6 | +5V | 18 | GND |
| 7 | GND | 19 | GND |
| 8 | Power Good | 20 | -5V |
| 9 | 5VSB | 21 | +5V |
| 10 | +12V | 22 | +5V |
| 11 | +12V | 23 | +5V |
| 12 | 3.3V | 24 | GND |

8 5 / 4 1

| No. | Pin Define |
|---|---|
| 1 | GND |
| 2 | GND |
| 3 | GND |
| 4 | GND |
| 5 | +12V |
| 6 | +12V |
| 7 | +12V |
| 8 | +12V |

## CPU/System FAN/ 风扇

4 1

1 / 4

4 / 1

| No. | Pin Define |
|---|---|
| 1 | GND |
| 2 | +12V |
| 3 | Sense |
| 4 | Speed Control |

## PMBUS

5 / 1

| No. | Pin Define |
|---|---|
| 1 | PMBus Clock |
| 2 | PMBus Data |
| 3 | PMBus Alert |
| 4 | GND |
| 5 | 3.3V Sense |

## IPMB

3 / 1

| No. | Pin Define |
|---|---|
| 1 | Clock |
| 2 | GND |
| 3 | Data |

## Front Panel Header/ 前面板

1 2 / 23 24

| No. | Pin Define | No. | Pin Define |
|---|---|---|---|
| 1 | Power LED+ | 2 | 5V Standby |
| 3 | No Pin | 4 | ID LED+ |
| 5 | Power LED- | 6 | ID LED- |
| 7 | HDD LED+ | 8 | System Status LED+ |
| 9 | HDD LED- | 10 | System Status LED- |
| 11 | Power Button | 12 | LAN1 Ac tive LED+ |
| 13 | GND | 14 | LAN1 Link LED- |
| 15 | Reset Button | 16 | SMBus Data |
| 17 | GND | 18 | SMBus Clock |
| 19 | ID Button | 20 | Case Open |
| 21 | GND | 22 | LAN2 Active LED+ |
| 23 | NMI Switch | 24 | LAN2 Link LED- |

## HDD Back Plane Board Header/ 硬盤背板排針

1 2 / 25 26

| No. | Pin Define | No. | Pin Define |
|---|---|---|---|
| 1 | BP_SGP_CLK | 2 | No Connect |
| 3 | BP_SGP_LOAD | 4 | FAN_SGP_Gate |
| 5 | BP_SGP_DOUT | 6 | GND |
| 7 | Key Pin | 8 | Reset |
| 9 | GND | 10 | BP_LED_A_N |
| 11 | BP_LED_G_N | 12 | GND |
| 13 | BP_SGP_DIN | 14 | No Connect |
| 15 | GND | 16 | SMB_BP_DATA |
| 17 | GND | 18 | SMB_BP_CLK |
| 19 | P_3V3_AUX | 20 | BMC_ACK |
| 21 | P_3V3_AUX | 22 | BMC_REQ |
| 23 | GND | 24 | Key Pin |
| 25 | BP_PRESENSE | 26 | GND |

## SATA Connector/SATA 接口

1 / 7

| No. | Pin Define |
|---|---|
| 1 | GND |
| 2 | TXP |
| 3 | TXN |
| 4 | GND |
| 5 | RXN |
| 6 | RXP |
| 7 | GND |

## SATA SGPIO Header/ 串行 GPIO

1 2 / 7 8

| No. | Pin Define |
|---|---|
| 1 | No Connect |
| 2 | No Pin |
| 3 | Data Out |
| 4 | GND |
| 5 | GND |
| 6 | Load |
| 7 | No Connect |
| 8 | Clock |

## SATA DOM Support Power Header

1 3

| No. | Pin Define |
|---|---|
| 1 | 5V for SATA DOM |
| 2 | GND |
| 3 | No Connect |

## Installing CPU/ 安装 CPU

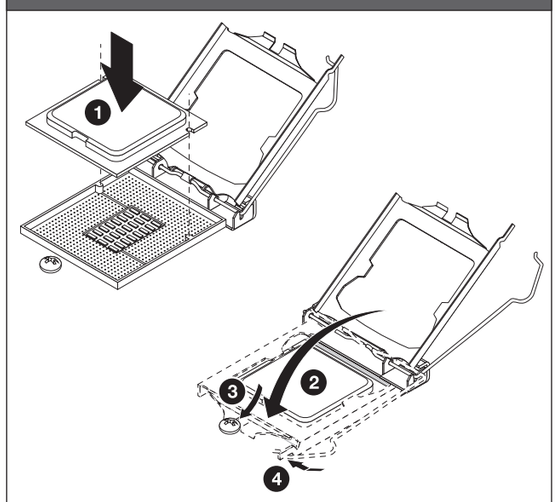

## Memory Population Configuration/ 安装内存

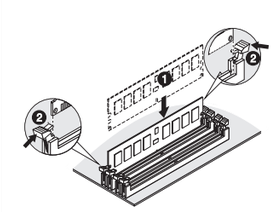

| Type | Ranks Per DIMM and Data Width | Supported Voltage | Speed (MT/s); Slot Per Channel (SPC) and DIMM Per Channel (DPC) | |
|---|---|---|---|---|
| | | | 2 Slot Per Channel | |
| | | | 1DPC | 2DPC |
| UDIMM Unbuffered DDR4 ECC | SR | 1.2V | 2133 | 2133 |
| UDIMM Unbuffered DDR4 non-ECC | DR | 1.2V | 2133 | 2133 |

- All channels in system run at the fastest common frequency.
- Mixing ECC and non-ECC UDIMMs anywhere on the platform is not supported.
- 1 and 2 DPC is supported at 2133MHz.

- 所有通道模式以最快的频率速度运行。
- 此主板不支持ECC与非ECC内存模组混合使用。
- 1 与 2 DPC 均支持2133MHz速度。

## USB 3.0 Header

10 11 / 1 20

| No. | Pin Define | No. | Pin Define |
|---|---|---|---|
| 1 | Power | 11 | IntA_P2_D+ |
| 2 | IntA_P1_SSRX- | 12 | IntA_P2_D- |
| 3 | IntA_P1_SSRX+ | 13 | GND |
| 4 | GND | 14 | IntA_P2_SSTX+ |
| 5 | IntA_P1_SSTX- | 15 | IntA_P2_SSTX- |
| 6 | IntA_P1_SSTX+ | 16 | GND |
| 7 | GND | 17 | IntA_P2_SSRX+ |
| 8 | IntA_P1_D- | 18 | IntA_P2_SSRX- |
| 9 | IntA_P1_D+ | 19 | Power |
| 10 | NC | 20 | No Pin |

## USB 2.0 Header

1 2 / 9 10

| No. | Pin Define | No. | Pin Define |
|---|---|---|---|
| 1 | Power (5V) | 6 | USB DY+ |
| 2 | Power (5V) | 7 | GND |
| 3 | USB DX- | 8 | GND |
| 4 | USB DY- | 9 | No Pin |
| 5 | USB DX+ | 10 | No Connect |

## TPM Connector/ 可信平台模块

1 2 / 13 14

| No. | Pin Define | No. | Pin Define |
|---|---|---|---|
| 1 | Clock | 8 | No Connect |
| 2 | P_3V3_AUX | 9 | LPC_LAD2 |
| 3 | LPC_RST | 10 | No Pin |
| 4 | P3V3 | 11 | LPC_LAD3 |
| 5 | LPC_LAD0 | 12 | GND |
| 6 | IRQ_SERIAL | 13 | LPC_FRAME_N |
| 7 | LPC_LAD1 | 14 | GND |

## COM2 Connector

1 2 / 9 10

| No. | Pin Define | No. | Pin Define |
|---|---|---|---|
| 1 | NDCD- | 6 | NDSR- |
| 2 | NSIN | 7 | NRTS- |
| 3 | NSOUT | 8 | NCTS- |
| 4 | NDTR- | 9 | NRI- |
| 5 | GND | 10 | No Pin |

## Case Open Intrusion Header

Open: Normal operation.

Closed: Active chassis intrustion alert.

## Jumper Settings/ 跳线设置

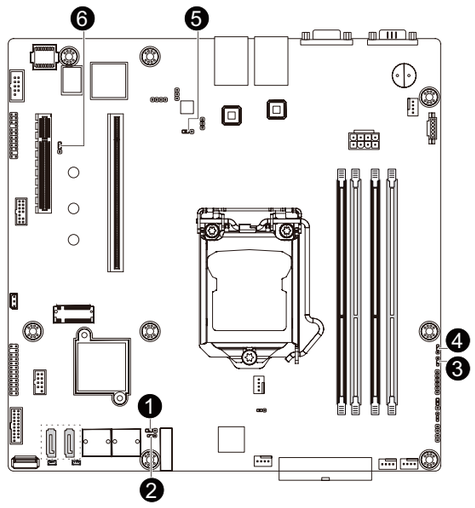

| No. | Desription |
|---|---|
| 1 | Clear CMOS Jumper<br>1-2 Close: Normal operation (Default setting)<br>2-3 Close: Clear CMOS data. |
| 2 | Clearing Supervisor Password Jumper<br>1-2 Close: Normal operation. (Default setting)<br>2-3 Close: Skip supervisor password. |
| 3 | ME Recovery Jumper<br>1-2 Close: Normal operation. (Default setting)<br>2-3 Close: ME recovery mode. |
| 4 | BIOS Recovery Jumper<br>1-2 Close: Normal operation. (Default setting)<br>2-3 Close: BIOS recovery mode. |
| 5 | ME Update Jumper<br>1-2 Close: Normal operation (Default setting)<br>2-3 Close: ME update mode. |
| 6 | S3 Power On Select Jumper<br>1-2 Close: Stop an initial power on when BMC is not ready.<br>2-3 Close: Keep initial power on. (Default setting) |

## Rear I/O Connector/ 后面板接口

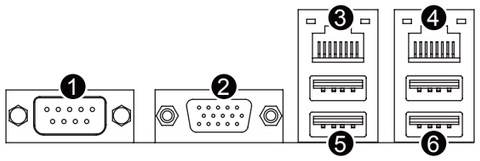

| No. | Desription | No. | Desription |
|---|---|---|---|
| 1 | Serial port | 4 | KVM Server Management 10/100/1000 LAN port (Shared LAN port) |
| 2 | VGA port | 5 | USB 2.0 ports |
| 3 | GbE Eternet LAN port | 6 | USB 3.0 ports |

Speed LED Link/Activity LED

3 4 10/100/1000 LAN LED:

| State | Description |
|---|---|
| Yellow On | 1Gbps data rate |
| Green On | 100Mbps data rate |
| Off | 10Mbps data rate |

PN:12QM1-MX31B0-00R

# Regulatory Notices

## WEEE Symbol Statement

The symbol shown below is on the product or on its packaging, which indicates that this product must not be disposed of with other waste. Instead, the device should be taken to the waste collection centers for activation of the treatment, collection, recycling and disposal procedure. The separate collection and recycling of your waste equipment at the time of disposal will help to conserve natural resources and ensure that it is recycled in a manner that protects human health and the environment. For more information about where you can drop off your waste equipment for recycling, please contact your local government office, your household waste disposal service or where you purchased the product for details of environmentally safe recycling.

- When your electrical or electronic equipment is no longer useful to you, "take it back" to your local or regional waste collection administration for recycling.
- If you need further assistance in recycling, reusing in your "end of life" product, you may contact us at the Customer Care number listed in your product's user's manual and we will be glad to help you with your effort.

## Restriction of Hazardous Substances (RoHS) Directive Statement

GIGABYTE products have not intended to add and safe from hazardous substances (Cd, Pb, Hg, Cr+6, PBDE and PBB). The parts and components have been carefully selected to meet RoHS requirement. Moreover, we at GIGABYTE are continuing our efforts to develop products that do not use internationally banned toxic chemicals.

## 限制使用有害物质 (RoHS) 指令声明

GIGABYTE产品未故意添加和使用有害物质（Cd、Pb、Hg、Cr+6、PBDE和PBB）。所有部件和元件均经过严格挑选，符合RoHS要求。此外，我们GIGABYTE一直致力于开发不使用国际上禁止的有毒化学品的产品。

## California Proposition 65 Warning

***WARNING:***
This product contains a chemicals , including lead, known to the State of California to cause cancer and birth defects or other reproductive harm.
For more information, please visit: http://www.p65warnings.ca.gov/

***Battery Warning:***
Incorrectly installing a battery or using incompatible battery may increase the risk of ifre explosion. Replace the battery only with the same or equivalent type.

- Do not disassemble, crush, punchture batteries.
- Do not store or place your battery pack next to or in a heat source such as a fire, heatgenerating appliance, can or exhaust vent. Heating battery cells to temperatures above 65oC (149oF) can cause explosion or fire.
- Do not attempt to open or service batteries. Do not dispose of batteries in a fire or with household waste.

电池警告：
电池安装不当或使用不兼容的电池会增加火灾爆炸风险。更换电池时，只可使用相同或同等类型的电池。

- 请勿拆解、挤压、刺破电池。
- 请勿将电池存放或放置在热源中或旁边，如火源、产生热的设备、罐体或排气口。电池温度升至65oC (149oF)以上可能导致爆炸或火灾。
- 请勿尝试打开或维修电池。电池废弃时，请勿投入火中或者作为家庭废弃物进行处理。

## 中华人民共和国电子信息产品中有毒有害物质或元素的名称及含量标识格式

依照中华人民共和国的有毒有害物质的限制要求(China RoHS)提供以下的表格：

关于符合中国《电子信息产品污染控制管理办法》的声明
Management Methods on Control of Pollution from Electronic Information Products
(China RoHS Declaration)

产品中有毒有害物质或元素的名称及含量
Hazardous Substances Table

| 部件名称(Parts) | 有毒有害物质或元素(Hazardous Substances) | | | | | |
|---|---|---|---|---|---|---|
| | 铅(Pb) | 汞(Hg) | 镉(Cd) | 六价铬 (Cr(VI)) | 多溴联苯 (PBB) | 多溴二苯醚 (PBDE) |
| PCB板<br>PCB | ○ | ○ | ○ | ○ | ○ | ○ |
| 结构件及风扇<br>Mechanical parts and Fan | × | ○ | ○ | ○ | ○ | ○ |
| 芯片及其他主动零件<br>Chip and other Active components | × | ○ | ○ | ○ | ○ | ○ |
| 连接器<br>Connectors | × | ○ | ○ | ○ | ○ | ○ |
| 被动电子元器件<br>Passive Components | × | ○ | ○ | ○ | ○ | ○ |
| 线材<br>Cables | ○ | ○ | ○ | ○ | ○ | ○ |
| 焊接金属<br>Soldering metal | ○ | ○ | ○ | ○ | ○ | ○ |
| 助焊剂，散热膏，标签及其他耗材<br>Flux,Solder Paste,Label and other Consumable Materials | ○ | ○ | ○ | ○ | ○ | ○ |

○:表示该有毒有害物质在该部件所有均质材料中的含量均在SJ/T11363-2006标准规定的限量要求以下。
Indicates that this hazardous substance contained in all homogenous materials of this part is below the limit requirement SJ/T 11363-2006

×:表示该有毒有害物质至少在该部件的某一均质材料中的含量超出SJ/T11363-2006标准规定的限量要求。
Indicates that this hazardous substance contained in at least one of the homogenous materials of this part is above the limit requirement in SJ/T 11363-2006

对销售之日的所受售产品，本表显示我公司供应链的电子信息产品可能包含这些物质。注意：在所售产品中可能会也可能不会含有所有所列的部件。
This table shows where these substances may be found in the supply chain of our electronic information products, as of the date of the sale of the enclosed products, Note that some of the component types listed above may or may not be a part of the enclosed product.

# Connect With Us

For more information, visit our website at:

**http://b2b.gigabyte.com**

You are a professional?
Get access to our complete source of sales & marketing materials at:

**http://reseller.b2b.gigabyte.com**

Join our server forum to discuss our products and get technical assistance at:

**http://forum.b2b.gigabyte.com**

**https://www.facebook.com/gigabyteserver**