GIGABYTE™

R283-Z90-AAD1
R283-Z90-AAD2
R283-Z90-AAD3

Rack Server

AMD EPYC™ 9004 Server System - 2U DP 12+4-Bay NVMe/SATA/SAS (AAD1/AAD2)

AMD EPYC™ 9004 Server System - 2U DP 12+2-Bay SATA/SAS (AAD3)

User Manual

Rev. 1.0

Copyright

© 2022 GIGA-BYTE TECHNOLOGY CO., LTD. All rights reserved.
The trademarks mentioned in this manual are legally registered to their respective owners.

Disclaimer

Information in this manual is protected by copyright laws and is the property of GIGABYTE. Changes to the specifications and features in this manual may be made by GIGABYTE without prior notice. No part of this manual may be reproduced, copied, translated, transmitted, or published in any form or by any means without GIGABYTE's prior written permission.

Documentation Classifications

In order to assist in the use of this product, GIGABYTE provides the following types of documentation:

- User Manual: detailed information & steps about the installation, configuration and use of this product (e.g. motherboard, server barebones), covering hardware and BIOS.
- User Guide: detailed information about the installation & use of an add-on hardware or software component (e.g. BMC firmware, rail-kit) compatible with this product.
- Quick Installation Guide: a short guide with visual diagrams that you can reference easily for installation purposes of this product (e.g. motherboard, server barebones).

Please see the support section of the online product page to check the current availability of these documents.

For More Information

For related product specifications, the latest firmware and software, and other information please visit our website at http://www.gigabyte.com

For GIGABYTE distributors and resellers, additional sales & marketing materials are available from our reseller portal: http://reseller.b2b.gigabyte.com

For further technical assistance, please contact your GIGABYTE representative or visit https://esupport.gigabyte.com/ to create a new support ticket

For any general sales or marketing enquiries, you may also message GIGABYTE server directly by email: server.grp@gigabyte.com

Conventions

The following conventions are used in this user's guide:

	**NOTE!** Pieces of additional information related to the current topic.
	**CAUTION!** Precautionary measures to avoid possible hardware or software problems.
	**WARNING!** Alerts to any damage that might result from doing or not doing specific actions.

Server Warnings and Cautions

Before installing a server, be sure that you understand the following warnings and cautions.

WARNING!

To reduce the risk of electric shock or damage to the equipment:

- Do not disable the power cord grounding plug. The grounding plug is an important safety feature.
- Plug the power cord into a grounded (earthed) electrical outlet that is easily accessible at all times.
- Unplug the power cord from the power supply to disconnect power to the equipment.



- Shock Hazard! Disconnect all power supply cords before servicing.
- Do not route the power cord where it can be walked on or pinched by items placed against it. Pay particular attention to the plug, electrical outlet, and the point where the cord extends from the server.
- Do not route the power cord where it can be walked on or pinched by items placed against it. Pay particular attention to the plug, electrical outlet, and the point where the cord extends from the server.

WARNING!

To reduce the risk of personal injury from hot surfaces, allow the drives and the internal system components to cool before touching them.

This server is equipped with high speed fans. Keep away from hazardous moving fan blades during servicing.

This equipment is intended to be used in Restrict Access Location. The access can only be gained by Skilled person. Only authorized by well trained professional person can access the restrict access location.

•

This equipment is not intended for use by children.

CAUTION!

- Do not operate the server for long periods with the access panel open or removed. Operating the server in this manner results in improper airflow and improper cooling that can lead to thermal damage.
- Danger of explosion if battery is incorrectly replaced.
- Replace only with the same or equivalent type recommended by the manufacturer.
- Dispose of used batteries according to the manufacturer's instructions.

CAUTION!

Risk of explosion if battery is replaced incorrectly or with an incorrect type. Replace the battery only with the same or equivalent type recommended by the manufacturer. Dispose of used batteries according to the manufacturer's instructions.

Warning Stability hazard

The slide-rail may tip over causing serious personal injury

- Before extending the rack to its installation position, read the installation instructions.
- Do not put any load on the slide-rail mounted equipment in the installation position.
- Do not leave the slide-rail mounted equipment in the installation position.

Electrostatic Discharge (ESD)

CAUTION!

ESD CAN DAMAGE DRIVES, BOARDS, AND OTHER PARTS. WE RECOMMEND THAT YOU PERFORM ALL PROCEDURES AT AN ESD WORKSTATION. IF ONE IS NOT AVAILABLE, PROVIDE SOME ESD PROTECTION BY WEARING AN ANTI-STATIC WRIST STRAP ATTACHED TO CHASSIS GROUND -- ANY UNPAINTED METAL SURFACE -- ON YOUR SERVER WHEN HANDLING PARTS.

Always handle boards carefully, they can be extremely sensitive to ESD. Hold boards only by their edges without touching any components or connectors. After removing a board from its protective ESD bag or from the system, place the board component side up on a grounded, static free surface. Use a conductive foam pad if available but not the ESD bag. Do not slide the board over any surface.

System power on/off: To service components within the server, please ensure the power has been disconnected.
e.g. Remove the node from the server chassis (to disconnect power) or disconnect the power from the server chassis.
Make sure the system is removed from the rack before opening the chassis, adding, or removing any non hot-plug components.

Hazardous conditions, devices and cables: Hazardous electrical conditions may be present on power, telephone, and communication cables. Turn off the system chassis and disconnect the cables attached to the system before servicing the chassis. Otherwise, personal injury or equipment damage can result.

Electrostatic discharge (ESD) and ESD protection: ESD can damage drives, boards, and other parts. We recommend that you perform all procedures in this chapter only at an ESD workstation. If one is not available, provide some ESD protection by wearing an antistatic wrist strap attached to chassis ground (any unpainted metal surface on the server) when handling parts.

ESD and handling boards: Always handle boards carefully. They can be extremely sensi-tive to electrostatic discharge (ESD). Hold boards only by their edges. After removing a board from its protective wrapper or from the system, place the board component side up on a grounded, static free surface. Use a conductive foam pad if available but not the board wrapper. Do not slide board over any surface.

Installing or removing jumpers: A jumper is a small plastic encased conductor that slips over two jumper pins. Some jumpers have a small tab on top that can be gripped with fin-gertips or with a pair of fine needle nosed pliers. If the jumpers do not have such a tab, take care when using needle nosed pliers to remove or install a jumper; grip the narrow sides of the jumper with the pliers, never the wide sides. Gripping the wide sides can dam-age the contacts inside the jumper, causing intermittent problems with the function con-trolled by that jumper. Take care to grip with, but not squeeze, the pliers or other tool used to remove a jumper, or the pins on the board may bend or break.

Table of Contents

Chapter 1 Hardware Installation 11
1-1 Installation Precautions 11
1-2 Product Specifications 12
1-3 System Block Diagram 19
1-3-1 R283-Z90-AAD1 19
1-3-2 R283-Z90-AAD2 20
1-3-3 R283-Z90-AAD3 21
Chapter 2 System Appearance 21
2-1 Front View 21
2-2 Rear View 22
2-3 Front Panel LEDs and Buttons 23
2-4 RoT LEDs 24
2-5 Rear System LAN LEDs 26
2-6 Power Supply Unit LED 27
2-7 Hard Disk Drive LEDs 28
Chapter 3 System Hardware Installation 29
3-1 Removing and Installing the Chassis Cover 30
3-2 Removing and Installing the Hard Disk Drive 31
3-3 Removing and Installing the Fan Duct 33
3-4 Removing and Installing the Heat Sink 34
3-5 Removing and Installing the CPU 35
3-6 Removing and Installing Memory 37
3-6-1 Twelves Channel Memory Configuration 37
3-6-2 Removing and Installing a Memory Module 38
3-6-3 Processor and Memory Module Matrix Table 38
3-6-4 Memory Population Table 39
3-7 Removing and Installing the PCIe Card 40
3-8 Installing the Mezzanine Card 42
3-8-1 Installing the OCP 3.0 Mezzanine Card 42
3-9 Installing the M.2 Device and Heat Sink 43
3-9-1 M.2 device with Heatsink 43
3-10 Replacing the Fan Assembly 44
3-11 Removing and Installing the Power Supply 45
3-12 Cable Routing 46

3-11-1 R283-Z90-AAD1 46
3-12-1 R283-Z90-AAD2 52
3-12-2 R283-Z90-AAD3 58
Chapter 4 Motherboard Components 64
4-1 Motherboard Components 64
4-2 Jumper Settings 66
4-3 G-SC Module 67
4-3-1 CDCR114 67
4-4 Backplane Board Storage Connector 68
4-4-1 CBP20C5 (Front System Storage Board) 68
4-4-2 CBP2022 (Rear System Storage Board) 69
Chapter 5 BIOS Setup 70
5-1 The Main Menu 72
5-2 Advanced Menu 75
5-2-1 Trusted Computing 77
5-2-2 PSP Firmware Versions 78
5-2-3 Legacy Video Select 79
5-2-4 AST2600 Super IO Configuration 80
5-2-5 S5 RTC Wake Settings 82
5-2-6 Serial Port Console Redirection 83
5-2-7 CPU Configuration 87
5-2-8 PCI Subsystem Settings 88
5-2-9 USB Configuration 90
5-2-10 Network Stack Configuration 92
5-2-11 NVMe Configuration 93
5-2-12 SATA Configuration 94
5-2-13 Graphic Output Configuration 95
5-2-14 AMD Mem Configuration Status 96
5-2-15 Tls Auth Configuration 97
5-2-16 RAM Disk Configuration 98
5-2-17 iSCSI Configuration 99
5-2-18 Intel(R) I350 Gigabit Network Connection 100
5-2-19 VLAN Configuration 102
5-2-20 MAC IPv4 Network Configuration 103
5-2-21 MAC IPv6 Network Configuration 104
5-3 AMD CBS Menu 105
5-3-1 CPU Common Options 106
5-3-2 DF Common Options 112
5-3-3 UMC Common Options 118
5-3-4 NBIO Common Options 138

5-3-5 FCH Common Options 148
5-3-6 NTB Common Options 157
5-3-7 SOC Miscellaneous Control 158
5-3-8 Workload Tuning 160
5-3-9 CXL Common Options 161
5-4 AMD PBS Menu 162
5-4-1 RAS 163
5-5 Chipset Setup Menu 165
5-5-1 North Bridge 166
5-5-2 Fabric Resource 167
5-6 Server Management Menu 169
5-6-1 System Event Log 171
5-6-2 View FRU Information 172
5-6-3 BMC Network Configuration 173
5-6-4 IPv6 BMC Network Configuration 174
5-7 Security Menu 175
5-7-1 Secure Boot 176
5-8 Boot Menu 178
5-9 Save & Exit Menu 180
5-10 BIOS Recovery 181

Chapter 1 Hardware Installation

1-1 Installation Precautions

The motherboard/system contain numerous delicate electronic circuits and components which can become damaged as a result of electrostatic discharge (ESD). Prior to installation, carefully read the service guide and follow these procedures:

- Prior to installation, do not remove or break motherboard S/N (Serial Number) sticker or warranty sticker provided by your dealer. These stickers are required for warranty validation.
- Always remove the AC power by unplugging the power cord from the power outlet before installing or removing the motherboard or other hardware components.
- When connecting hardware components to the internal connectors on the motherboard, make sure they are connected tightly and securely.
- When handling the motherboard, avoid touching any metal leads or connectors.
- It is best to wear an electrostatic discharge (ESD) wrist strap when handling electronic components such as a motherboard, CPU or memory. If you do not have an ESD wrist strap, keep your hands dry and first touch a metal object to eliminate static electricity.
- Prior to installing the motherboard, please have it on top of an antistatic pad or within an electrostatic shielding container.
- Before unplugging the power supply cable from the motherboard, make sure the power supply has been turned off.
- Before turning on the power, make sure the power supply voltage has been set according to the local voltage standard.
- Before using the product, please verify that all cables and power connectors of your hardware components are connected.
- To prevent damage to the motherboard, do not allow screws to come in contact with the motherboard circuit or its components.
- Make sure there are no leftover screws or metal components placed on the motherboard or within the computer casing.
- Do not place the computer system on an uneven surface.
- Do not place the computer system in a high-temperature environment.
- Turning on the computer power during the installation process can lead to damage to system components as well as physical harm to the user.
- If you are uncertain about any installation steps or have a problem related to the use of the product, please consult a certified computer technician.

1-2 Product Specifications

NOTE:

We reserve the right to make any changes to the product specifications and product-related information without prior notice.

System Dimension	◆ 2U ◆ 438 (W) x 87 (H) x 815(D) mm
CPU	◆ AMD EPYC™ 9005 Series Processors ◆ AMD EPYC™ 9004 Series Processors Dual processor, cTDP up to 300W ◆ EPYC 9654 cTDP up to 400W NOTE: ◆ cTDP supported up to 400W under limited thermal conditions. Please contact our sales representatives for more details. ◆ If only 1 CPU is installed, some PCIe or memory functions might be unavailable.
Socket	◆ 2 x LGA 6096 ◆ Socket SP5
Chipset	◆ System on Chip
Memory	◆ 24 x DIMM slots ◆ DDR5 memory supported ◆ 12-Channel memory architecture ◆ RDIMM: Up to 4800 MT/s
LAN	**Rear (G-SCM board - CDCR114):** 2 x 1Gb/s LAN (1 x Intel® I350-AM2) ◆ Support NCSI function ◆ 1 x 10/100/1000 management LAN
Video	◆ Integrated in Aspeed® AST2600 ◆ 1 x Mini-DP

Storage	**R283-Z90-AAD1** **Front hot-swap:** ◆ 12 x 3.5"/2.5" Gen4 NVMe/SATA/**SAS**[1] ◆ (4 x NVMe from CPU_0, 8 x NVMe from CPU_1) ◆ (SATA from CPU_0) **Rear hot-swap:** ◆ 4 x 2.5" SATA/**SAS**[1] ◆ (SATA from CPU_0) **Internal M.2:** ◆ 1 x M.2 (2280/22110), PCIe Gen3 x4, from CPU_0 ◆ 1 x M.2 (2280/22110), PCIe Gen3 x4, from CPU_1 ◆ 1 x M.2 (2280/22110), PCIe Gen3 x2, from CPU_1 [1] SAS card is required to support SAS drives.
	R283-Z90-AAD2 **Front hot-swap:** ◆ 4 x 3.5"/2.5" Gen4 NVMe/SATA/**SAS**[1] ◆ 8 x 3.5"/2.5" SATA/**SAS** [1] ◆ (NVMe from CPU_1) ◆ (SATA from CPU_0) **Rear hot-swap:** ◆ 4 x 2.5" SATA/**SAS**[1] ◆ (SATA from CPU_0) **Internal M.2:** ◆ 1 x M.2 (2280/22110), PCIe Gen3 x4, from CPU_0 ◆ 1 x M.2 (2280/22110), PCIe Gen3 x4, from CPU_1 ◆ 1 x M.2 (2280/22110), PCIe Gen3 x2, from CPU_1 [1] SAS card is required to support SAS drives.

Storage	**R283-Z90-AAD3** **Front hot-swap:** ◆ 12 x 3.5"/2.5" SATA/**SAS** [1] ◆ (SATA from CPU_0) **Rear hot-swap:** ◆ 2 x 2.5" SATA/**SAS**[1] ◆ (SATA from CPU_0) **Internal M.2:** ◆ 1 x M.2 (2280/22110), PCIe Gen3 x4, from CPU_0 ◆ 1 x M.2 (2280/22110), PCIe Gen3 x4, from CPU_1 ◆ 1 x M.2 (2280/22110), PCIe Gen3 x2, from CPU_1 [1] SAS card is required to support SAS drives.
SAS	◆ Require SAS add-in cards
RAID	**R283-Z90-AAD1/R283-Z90-AAD2** ◆ Require RAID add-in cards **Optional compatible RAID Cards:** ◆ NVMe RAID Cards with SupremeRAID™ by Graid Technology ◆ RAID Card models: SR-1001-ED4 ◆ Support RAID 0/1/5/6/10
RAID	**R283-Z90-AAD3** ◆ Require RAID add-in cards

Expansion Slot	**R283-Z90-AAD1** **Riser Card CRS101T:** ◆ 1 x FHHL x16 (Gen5 x16), from CPU_0 **Riser Card CRS101Q:** ◆ 1 x FHHL x16 (Gen5 x16), from CPU_1 **Riser Card CRS202M:** ◆ 1 x FHHL x16 (Gen5 x16), from CPU_0 ◆ 1 x PCIe x16, **disabled** 1 x OCP NIC 3.0 (Gen5 x16), from CPU_0, **occupied for NVMe** 1 x OCP NIC 3.0 (Gen5 x16), from CPU_1 Supports NCSI function
Expansion Slot	**R283-Z90-AAD2** **Riser Card CRS101T:** ◆ 1 x FHHL x16 (Gen5 x16), from CPU_0 **Riser Card CRS101Q:** ◆ 1 x FHHL x16 (Gen5 x16), from CPU_1 **Riser Card CRS202M:** ◆ 1 x FHHL x16 (Gen5 x16), from CPU_0 ◆ 1 x PCIe x16, **disabled** **Riser Card CRS202N:** ◆ 1 x FHHL x16 (Gen5 x16), from CPU_1 ◆ 1 x PCIe x16, **disabled** 1 x OCP NIC 3.0 (Gen5 x16), from CPU_0 Supports NCSI function 1 x OCP NIC 3.0 (Gen5 x16), from CPU_1 Supports NCSI function

Expansion Slot	**R283-Z90-AAD3** **Riser Card CRS101T:** ◆ 1 x FHHL x16 (Gen5 x16), from CPU_0 **Riser Card CRS101Q:** ◆ 1 x FHHL x16 (Gen5 x16), from CPU_1 **Riser Card CRS202M:** ◆ 1 x FHHL x16 (Gen5 x16), from CPU_0 ◆ 1 x FHHL x16 (Gen5 x8), from CPU_1 **Riser Card CRS202N:** ◆ 1 x FHHL x16 (Gen5 x16), from CPU_1 ◆ 1 x FHHL x16 (Gen5 x8), from CPU_1 1 x OCP NIC 3.0 (Gen5 x16), from CPU_0 Supports NCSI function 1 x OCP NIC 3.0 (Gen5 x16), from CPU_1 Supports NCSI function
Front I/O	◆ 2 x USB 3.2 Gen1 ports (Type-A) ◆ 1 x Power button with LED ◆ 1 x ID button with LED ◆ 1 x NMI button ◆ 1 x Reset button ◆ 2 x LAN activity LEDs ◆ 1 x Storage activity LED ◆ 1 x System status LED
Rear I/O	**G-SCM board - CDCR114:** ◆ 2 x USB 3.2 Gen1 ports (Type-A) ◆ 1 x Mini-DP ◆ 2 x RJ45 ports ◆ 1 x MLAN port ◆ 1 x ID LED
Backplane Board	◆ Speed and bandwidth: ◆ **Front side - CBP20C5:** PCIe Gen4 x4 or SATA 6Gb/s or SAS 12Gb/s ◆ **Rear side - CBP2022:** SATA 6Gb/s or SAS 12Gb/s
Security Modules	◆ 1 x TPM header with SPI interface ◆ **Optional** TPM2.0 kit: CTM010

Power Supply	◆ Dual 1600W 80 PLUS Platinum redundant power supply ◆ AC Input: 100-240V [Note] GIGABYTE offers PSUs with various efficiency ratings and power outputs. Full redundancy may depend on your server configuration, and alternative PSU options may be needed. Please contact our sales representatives for the best power solution.
System Management	◆ Aspeed® AST2600 Baseboard Management Controller ◆ GIGABYTE Management Console web interface ◆ Dashboard ◆ HTML5 KVM ◆ Sensor Monitor (Voltage, RPM, Temperature, CPU Status …etc.) ◆ Sensor Reading History Data ◆ FRU Information ◆ SEL Log in Linear Storage / Circular Storage Policy ◆ Hardware Inventory ◆ Fan Profile ◆ System Firewall ◆ Power Consumption ◆ Power Control ◆ Advanced power capping ◆ LDAP / AD / RADIUS Support ◆ Backup & Restore Configuration ◆ Remote BIOS/BMC/CPLD Update ◆ Event Log Filter ◆ User Management ◆ Media Redirection Settings ◆ PAM Order Settings ◆ SSL Settings ◆ SMTP Settings
Operating Properties	◆ Operating temperature: 10°C to 35°C ◆ Operating humidity: 8%-80% (non-condensing) ◆ Non-operating temperature: -40°C to 60°C ◆ Non-operating humidity: 20%-95% (non-condensing)

1-3 System Block Diagram

1-3-1 R283-Z90-AAD1

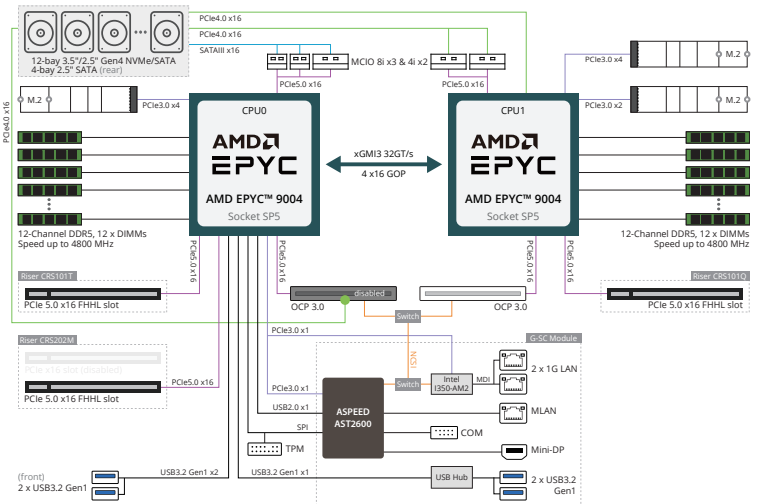

1-3-2 R283-Z90-AAD2

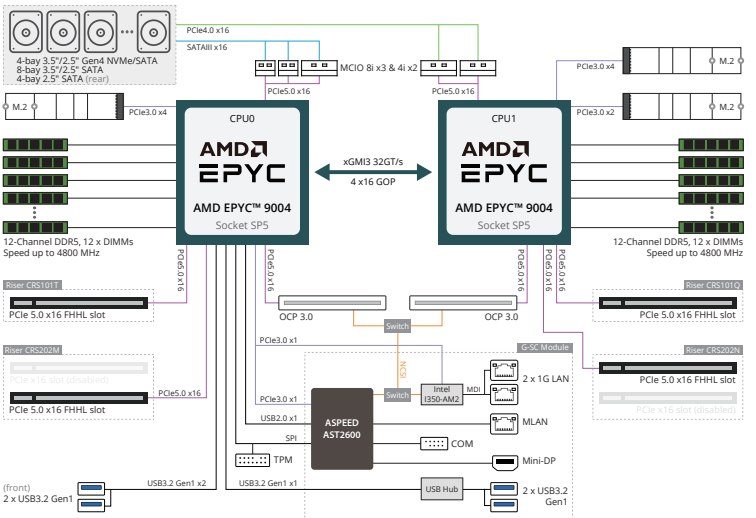

1-3-3 R283-Z90-AAD3

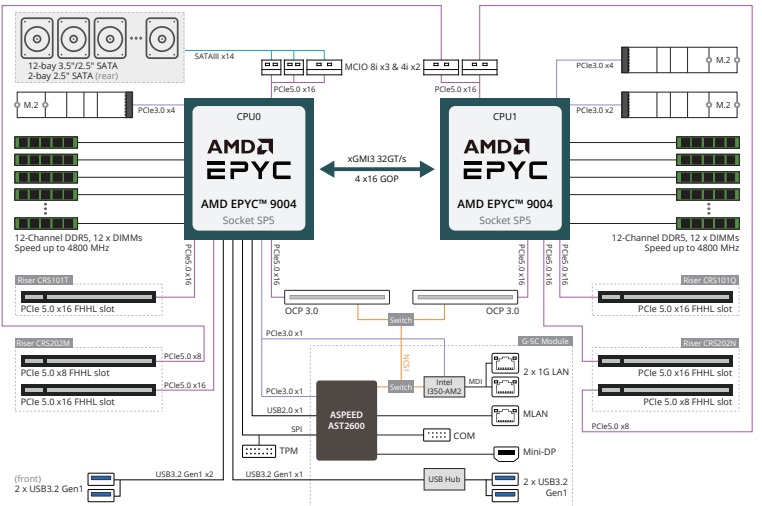

Chapter 2 System Appearance

2-1 Front View



No.	Description
1.	Front Panel LEDs and Buttons
2.	USB 3.2 Gen1 Port x 2
Note! Drives with green latches support NVMe.	

- Refer to section **2-3 Front Panel LEDs and Buttons** for a detailed description of the function of the LEDs.

2-2 Rear View

R283-Z90-AAD1

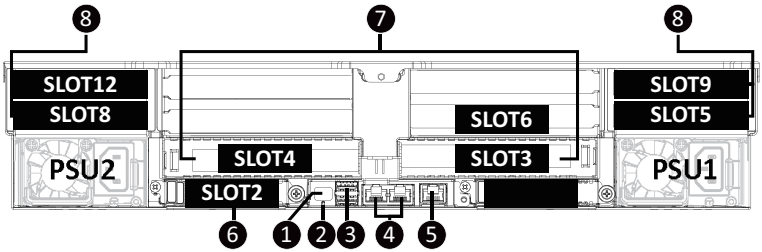

R283-Z90-AAD2

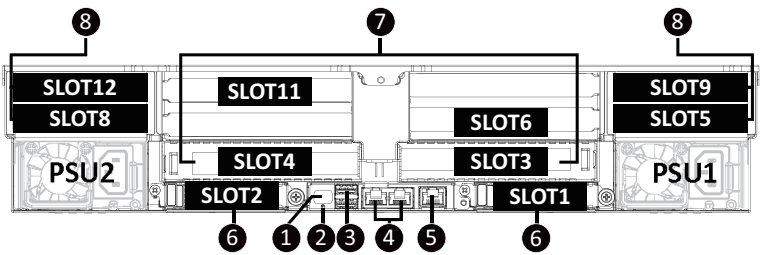

R283-Z90-AAD3

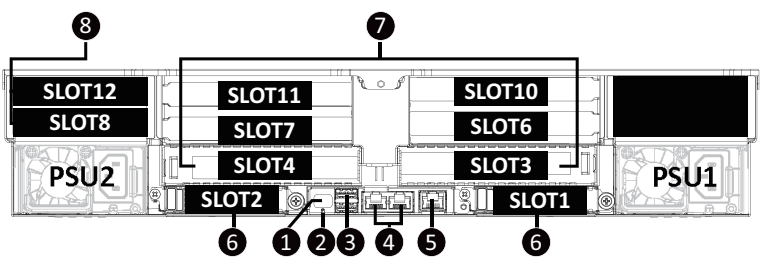

No.	Description	No.	Description
1.	Mini DP Port	5.	Server Management LAN Port
2.	ID LED	6.	OCP 3.0 Slot (Option/SFF)
3.	USB 3.2 Gen1 Port x 2	7.	PCIe Slot
4.	1GbE LAN Port x 2	8.	2.5" Hard Drive Bay

- Refer to section **2-5 Rear System LAN LEDs** for a detailed description of the function of the LEDs.

2-3 Front Panel LEDs and Buttons

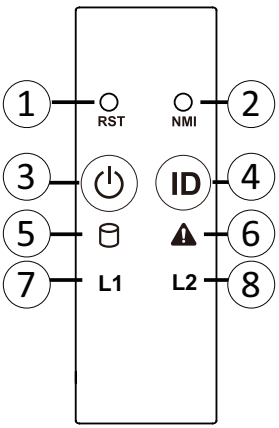

No.	Name	Color	Status	Description
1.	Reset Button	--	--	Press this button to reset the system.
2.	NMI button	--	--	Press this button for the server to generate a NMI to the processor. If multiple-bit ECC errors occur, the server will effectively be halted.
3.	Power button with LED	Green	On	Indicates the system is powered on.
		Green	Blink	System is in ACPI S1 state (sleep mode).
		N/A	Off	- System is not powered on or in ACPI S5 state (power off) - System is in ACPI S4 state (hibernate mode)
4.	ID Button with LED(Note)	Blue	On	Indicates the system identification is active.
		N/A	Off	Indicates the system identification is disabled.
5.	HDD Status LED(Note)	Green	On	Indicates locating the HDD.
			Blink	Indicates accessing the HDD.
		Amber	On	Indicates HDD error.
		Green/ Amber	Blink	Indicates HDD rebuilding.
		N/A	Off	Indicates no HDD access or no HDD error.
6.	System Status LED			This LED represents the RoT function LED behavior. Please see the following section for detail LED behavior.
7/8.	LAN1/2 Active/ Link LED	Green	On	Indicates a link between the system and the network or no access.
		Green	Blink	Indicates data trasmission or receiving is occuring.
		N/A	Off	Indicates no data transmission or receiving is occuring.

(Note) If your server features RoT function, please see the following section for detail LED behavior.

2-4 RoT LEDs

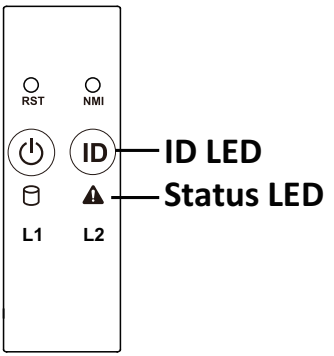

	LED on Front panel(Note5)	
	ID LED	Status LED
EC Firmware (FW) Authentication fail or not exit		
EC FW is broken or not exit (Note1)	OFF	OFF
Authenticating/Recovering BMC/BIOS Images		
Authenticating Images	OFF	OFF
Recovering BMC Active Flash	Blinks Blue 4 times per second	Blinks Green 4 times per second
Recovering BIOS Active Flash	Blinks Blue 4 times per second	Blinks Green 4 times per second
Authentication (AUTH) Pass		
Recovering BIOS Active Flash	OFF	OFF
BMC : AUTH pass after doing recovery **BIOS : AUTH pass after doing recovery**	OFF	OFF
BMC : AUTH pass after doing recovery **BIOS : AUTH pass**	OFF	OFF
BMC : AUTH pass **BIOS : AUTH pass after doing recovery**	OFF	OFF

Active Flash Authentication (AUTH) Fail		
BMC : AUTH Fail[Note2]	Blinks Blue 1 time per second	Blinks Green 1 time per second
BIOS : AUTH fail[Note2]	Blinks Blue 1 time per second	Blinks Amber 1 time per second
BMC : AUTH fail after doing recovery[Note3]	Blinks Blue 2 times per second [ON OFF OFF]	Blinks Green 2 times per second [ON OFF OFF]
BIOS : AUTH fail after doing recovery[Note3]	Blinks Blue 2 times per second [ON OFF OFF]	Blinks Amber 2 times per second [ON OFF OFF]
Backup Flash Authentication Fail[Note4]		
BMC : AUTH fail	Blinks Blue 2 times per second [ON OFF ON OFF]	Blinks Green 2 times per second [ON OFF ON OFF]
BIOS : AUTH fail	Blinks Blue 2 times per second [ON OFF ON OFF]	Blinks Amber 2 times per second [ON OFF ON OFF]

NOTE!

1. EC FW is broken or not exited result in Microchip CEC1702 cannot load EC FW for authentication.
2 CEC1702's bootloader load EC FW from BMC Flash1 when AC on. It must authenticate this FW firstly before run the FW. If the authenticate fail or not get the FW successfully, CEC1702 is not allowed to execute this FW and ECSTS_LED1 on the MB is OFF state.
3. if active flash is still authentication failed after recovery sequence, Microchip CEC1702 stop the process and showing LED behavior.
4. If backup flash authentication is failed cause by configuration table, public key or protected area is broken. Microchip CEC1702 stop the process and showing LED behavior.
5. Front panel LED is controlled by BMC or Microchip CEC1702. Once Microchip CEC1702 is working(Auth or recovery), the front panel LED is controlled by Microchip CEC1702 and vice versa.

2-5 Rear System LAN LEDs

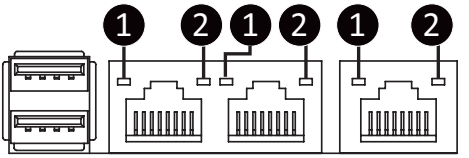

No.	Name	Color	Status	Description
1.	1GbE Speed LED	Yellow	On	1 Gbps data rate
		Green	On	100 Mbps data rate
		N/A	Off	10 Mbps data rate
2.	1GbE Link / Activity LED	Green	On	Link between system and network or no access
			Blink	Data transmission or reception is occurring.
		N/A	Off	No data transmission or reception is occurring.

2-6 Power Supply Unit LED

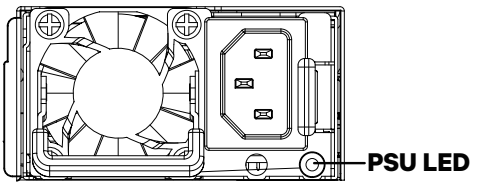

State	Description
OFF	No AC power to all power supplies
1Hz Green Blinking	AC present / only standby on / Cold redundant mode
2Hz Green Blinking	Power supply firmware updateing mode
Amber	AC cord unplugged or AC power lost; with a second power supply in parallel still with AC input power
	Power supply critical event causing shut down: failure, OCP, OVP, fan failure and UVP
0.5Hz Amber Blinking	Power supply warning events where the power supply continues to operate: high temp, high power, high current and slow fan

2-7 Hard Disk Drive LEDs

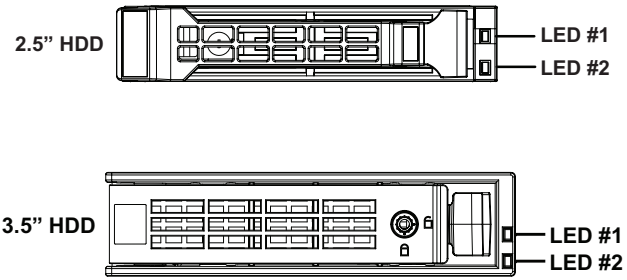

RAID SKU		LED #1	Locate	HDD Fault	Rebuilding	HDD Access	HDD Present (No Access)
No RAID configuration (via HBA)	Disk LED (LED on Back Panel)	Green	ON(*1)	OFF		BLINK (*2)	OFF
		Amber	OFF	OFF		OFF	OFF
	Removed HDD Slot (LED on Back Panel)	Green	ON(*1)	OFF		--	--
		Amber	OFF	OFF		--	--
RAID configuration (via HW RAID Card or SW RAID Card)	Disk LED	Green	ON	OFF		BLINK (*2)	OFF
		Amber	OFF	ON	(Low Speed: 2 Hz)	OFF	OFF
	Removed HDD Slot	Green	ON(*1)	OFF	(*3)	--	--
		Amber	OFF	ON	(*3)	--	--

LED #2	HDD Present	No HDD
Green	ON	OFF

NOTE:

*1: Depends on HBA/Utility Spec.

*2: Blink cycle depends on HDD's activity signal.

*3: If HDD is pulled out during rebuilding, the disk status of this HDD is regarded as faulty.

Chapter 3 System Hardware Installation



Pre-installation Instructions

Computer components and electronic circuit boards can be damaged by discharges of static electricity. Working on computers that are still connected to a power supply can be extremely dangerous. Follow the simple guidelines below to avoid damage to your computer or injury to yourself.

- Always disconnect the computer from the power outlet whenever you are working inside the computer case.
- If possible, wear a grounded wrist strap when you are working inside the computer case. Alternatively, discharge any static electricity by touching the bare metal system of the computer case, or the bare metal body of any other grounded appliance.
- Hold electronic circuit boards by the edges only. Do not touch the components on the board unless it is necessary to do so. Do not flex or stress the circuit board.
- Leave all components inside the static-proof packaging until you are ready to use the component for the installation.

3-1 Removing and Installing the Chassis Cover

Before you remove or install the system cover

- Make sure the system is not turned on or connected to AC power.

Follow these instructions to remove the chassis cover:

1. Remove the screw securing the chassis cover.
2. Unlock the plastic handle and pull the grip handle to open the panel cover.
3. Slide the cover cover to the rear of the system and then remove the cover in the direction indicated by the arrow.
4. To reinstall the chassis cover follow steps 1-4 in reverse order.

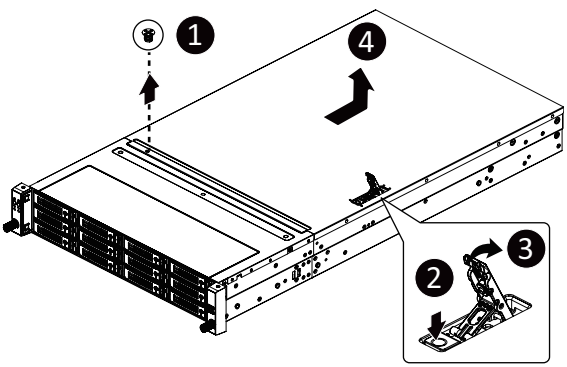

3-2 Removing and Installing the Hard Disk Drive

Read the following guidelines before you begin to install the hard disk drive:

- Take note of the HDD tray orientation before sliding it out.
- The tray will not fit back into the bay if it is inserted incorrectly.
- Make sure that the hard disk drive is connected to the connector on the backplane.

Follow these instructions to install a 3.5" hard disk drive:

1. Press the release button.
2. Extend the locking lever.
3. Pull the locking lever in the direction indicated to remove the 3.5" HDD tray.
4. Pull the sides of the HDD tray in the direction indicated.
5. Slide the hard disk drive into the HDD tray.
6. Push the sides of the HDD tray back in the direction indicated to secure the hard disk drive in place.
7. Reinsert the HDD tray into the slot and close the locking lever.

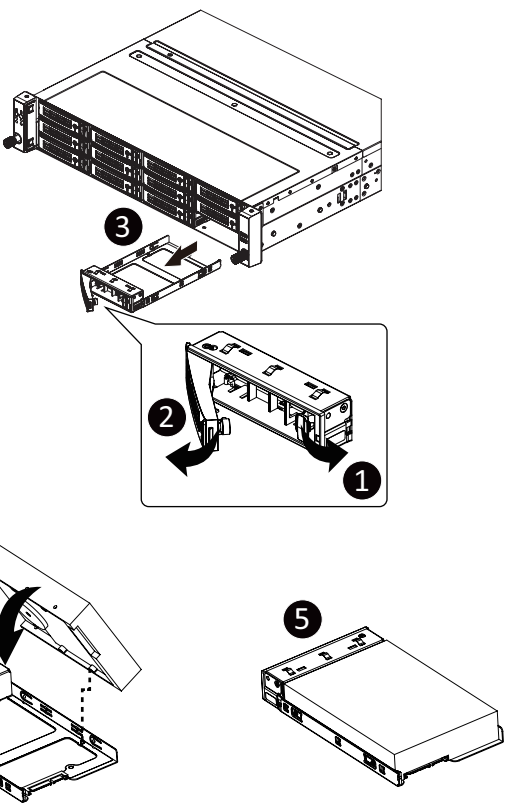

Follow these instructions to install a 2.5" hard disk drive into 3.5" HDD Tray:

1. Press the release button.
2. Extend the locking lever.
3. Pull the locking lever in the direction indicated to remove the HDD tray.
4. Align the hard disk drive with the positioning screw on the HDD tray.
5. Secure the hard disk drive with five screws.
6. Reinsert the HDD tray into the slot and close the locking lever

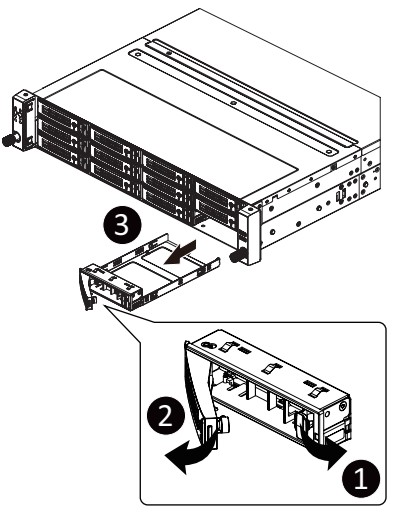

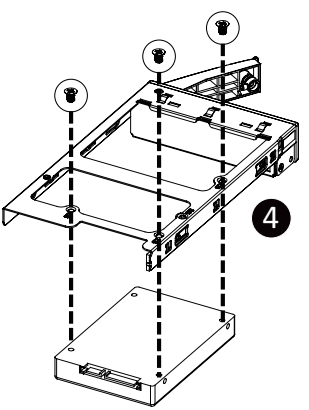

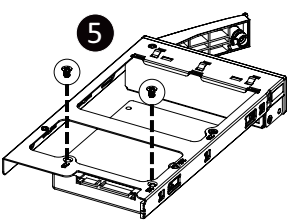

3-3 Removing and Installing the Fan Duct

Follow these instructions to remove the fan duct:

1. Lift up to remove the fan duct.
2. To reinstall the fan duct, align the fan duct with the guiding groove. Push down the fan duct until it is firmly seated on the system.

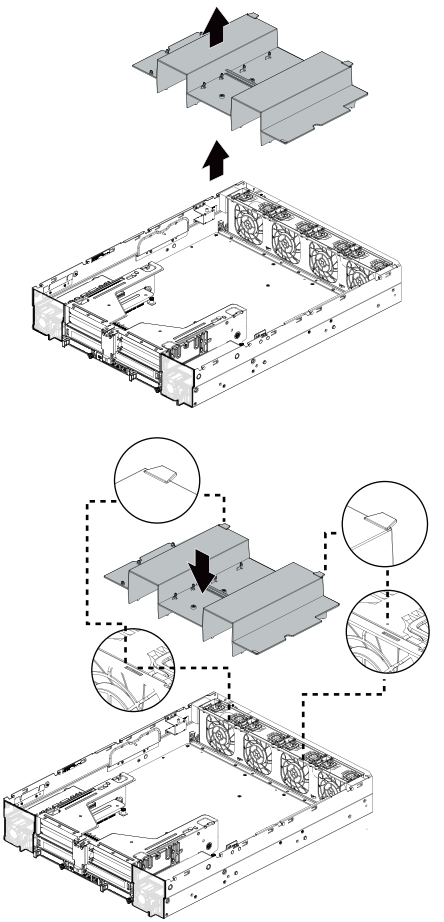

3-4 Removing and Installing the Heat Sink

Read the following guidelines before you begin to install the heat sink:

- Always turn off the computer and unplug the power cord from the power outlet before installing the heat sink to prevent hardware damage.
- Unplug all cables from the power outlets.
- Disconnect all telecommunication cables from their ports.
- Place the system unit on a flat and stable surface.
- Open the system according to the instructions.

WARNING!

Failure to turn off the server before you start installing components may cause serious damage. Do not attempt the procedures described in the following sections unless you are a qualified service technician.

Follow these instructions to install the heat sink:

1. Loosen the screws securing the heat sink in place in reverse order (6→5→4→3→2→1).
2. Lift and remove the heat sink from the system.
3. To install the heat sink, reverse steps 1-2 while ensuring that you tighten the captive screws in sequential order (1→2→3→4→5→6) as seen in the image below.

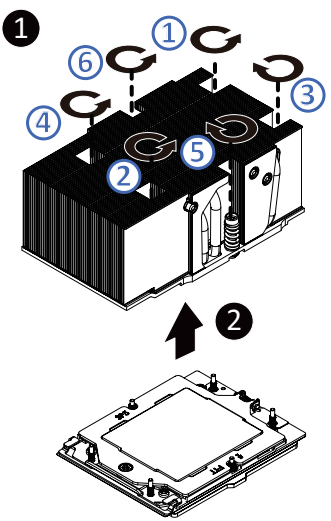

3-5 Removing and Installing the CPU

Read the following guidelines before you begin to install the CPU:

- Make sure that the motherboard supports the CPU.
- Always turn off the computer and unplug the power cord from the power outlet before installing the CPU to prevent hardware damage.
- Unplug all cables from the power outlets.
- Disconnect all telecommunication cables from their ports.
- Place the system unit on a flat and stable surface.
- Open the system according to the instructions.

WARNING!

Failure to properly turn off the server before you start installing components may cause serious damage. Do not attempt the procedures described in the following sections unless you are a qualified service technician.

Follow these instructions to install the CPU:

1. Loosen the three captive screws securing the CPU cover.
2. Flip open the CPU cover.
3. Remove the CPU carrier from the CPU frame using the handle on the CPU carrier.
4. Using the handle on the CPU carrier insert the new CPU carrier with CPU installed into the CPU frame.

   NOTE: Ensure the CPU is installed in the CPU carrier in the correct orientation, with the triangle on the CPU aligned to the top left corner of the CPU carrier.
5. Flip the CPU frame with CPU installed into place in the CPU socket.
6. Flip the CPU cover into place over the CPU socket.
7. Tighten the CPU cover screw to secure the CPU cover in place.
8. Repeat steps 1-7 for the second CPU.
9. To remove the CPUs, follow steps 1-7 in reverse order.

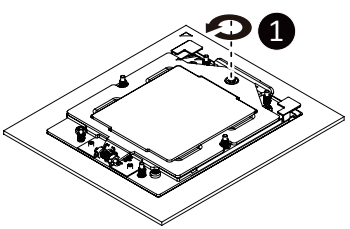

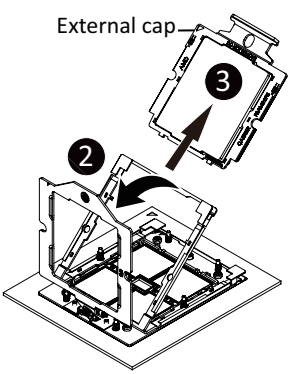

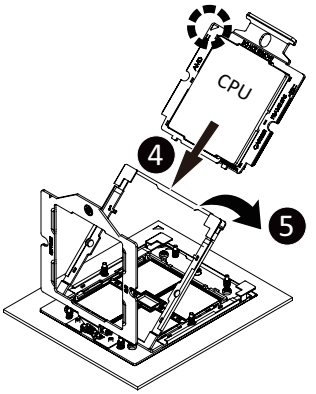

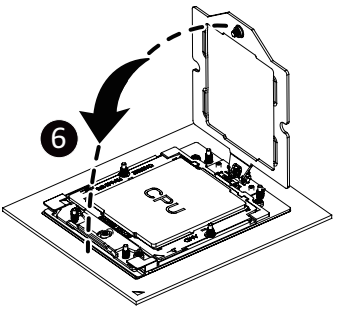

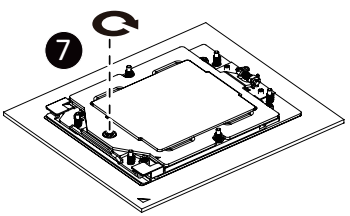

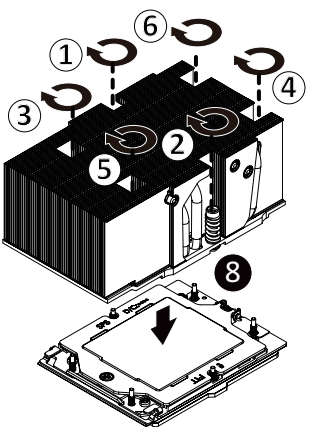

- Lock the CPU by using a Torx T20 screwdriver to tighten screw.
- When installing the heatsink to CPU, use a Torx T20 screwdriver to tighten 6 captive nuts in sequence as 1-6.
- The screw tightening torque: 13.5 ± 0.5 kgf-cm.
- To ensure the system operates properly, make sure the heatsink is seated on the processor firmly.

3-6 Removing and Installing Memory

Read the following guidelines before you begin to install the memory:

- Make sure that the motherboard supports the memory. It is recommended that memory of the same capacity, brand, speed, and chips be used.
- Always turn off the computer and unplug the power cord from the power outlet before installing the memory to prevent hardware damage.
- Memory modules have a foolproof design. A memory module can be installed in only one direction. If you are unable to insert the memory, switch the direction.

3-6-1 Twelves Channel Memory Configuration

This motherboard provides 24 DDR5 memory sockets and supports Eight Channel Technology. After the memory is installed, the BIOS will automatically detect the specifications and capacity of the memory.

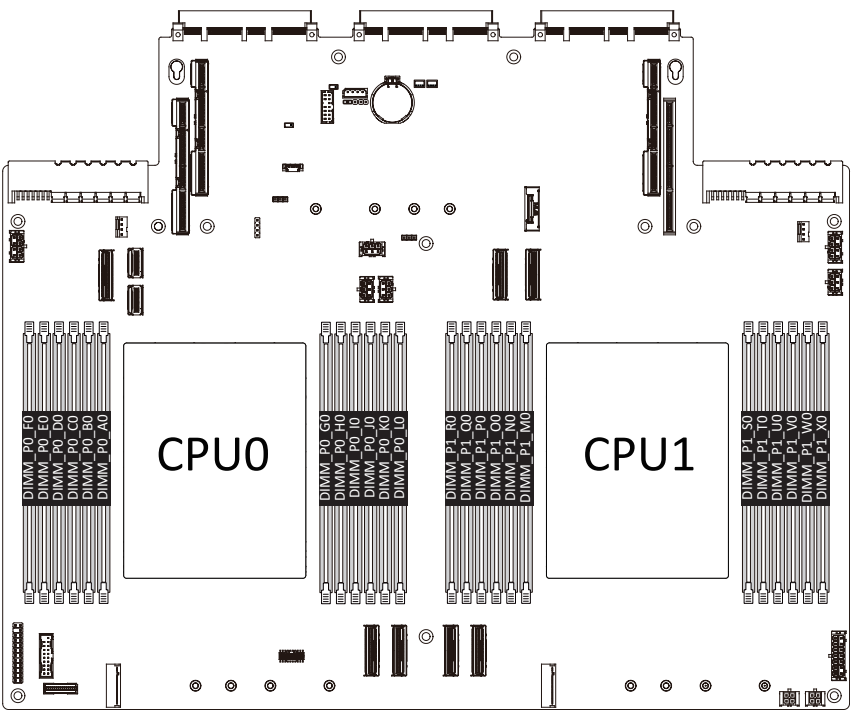

3-6-2 Removing and Installing a Memory Module

Before installing a memory module, make sure to turn off the computer and unplug the power cord from the power outlet to prevent damage to the memory module. Be sure to install DDR5 DIMMs on to this motherboard.

Follow these instructions to install a DIMM module:

1. Insert the DIMM memory module vertically into the DIMM slot and push it down.
2. Close the plastic clip at both edges of the DIMM slots to lock the DIMM module.
3. Reverse the installation steps when you want to remove the DIMM module.

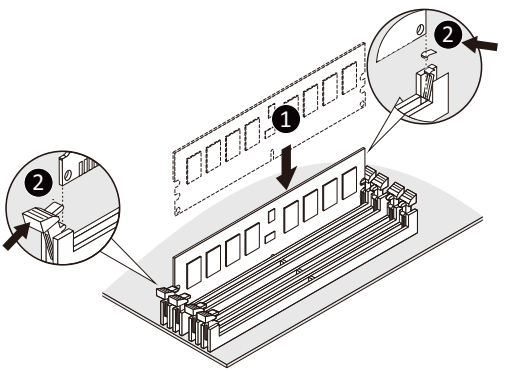

3-6-3 Processor and Memory Module Matrix Table

Memory Q'ty for each CPU	CPU0												CPU1											
	F0	E0	D0	C0	B0	A0	G0	H0	I0	J0	K0	L0	R0	Q0	P0	O0	N0	M0	S0	T0	U0	V0	W0	X0
1 DIMM						v												v						
2 DIMM						v	v											v	v					
4 DIMM				v		v	v		v							v		v	v		v			
6 DIMM				v	v	v	v	v	v							v	v	v	v	v	v			
8 DIMM		v		v	v	v	v	v	v		v			v		v	v	v	v	v	v		v	
10 DIMM		v	v	v	v	v	v	v	v	v	v			v	v	v	v	v	v	v	v	v	v	
12 DIMM	v	v	v	v	v	v	v	v	v	v	v	v	v	v	v	v	v	v	v	v	v	v	v	v

3-6-4 Memory Population Table

EPYC Memory Speed based on DIMM Population (One DIMM per Channel)

DIMM Type	DIMM Population	Max EPYC 9004 DDR5 Frequency (MT/s)
	DIMM 0	
RDIMM	1R (1 Rank)	4800
	2R (2 Ranks)	4800
3DS RDIMM	2S2R (4 Ranks)	4800
	2S4R (8 Ranks)	4800
	2S8R (16 ranks)	4800

Note:

- When only one DIMM is used, it must be populated in memory slot DIMM1.

3-7 Removing and Installing the PCIe Card

- Voltages can be present within the server whenever an AC power source is connected. This voltage is present even when the main power switch is in the off position. Ensure that the system is powered off and all power sources have been disconnected from the server prior to installing a PCIe card.
- Failure to observe these warnings could result in personal injury or damage to equipment.

- The PCIe riser assembly does not include a riser card or any cabling as standard. To install a PCIe card, a riser card must be installed.

Follow these instructions to install a PCIe card:

1. Loosen the two thumbnail screws securing the riser bracket inside the system.
2. Lift up the riser bracket out of system.
3. Remove the screw securing the slot cover from riser bracket.
4. Orient the PCIe card with the riser guide slot and push in the direction of the arrow until the PCIe card sits in the PCIe card connector.
   NOTE: Some riser brackets allow for single or multiple PCIe cards.
   Repeat steps 3-4 as necessary.
5. Secure the PCIe card with the screw.
6. Repeat steps 1-2 to install the PCIe card into the system.

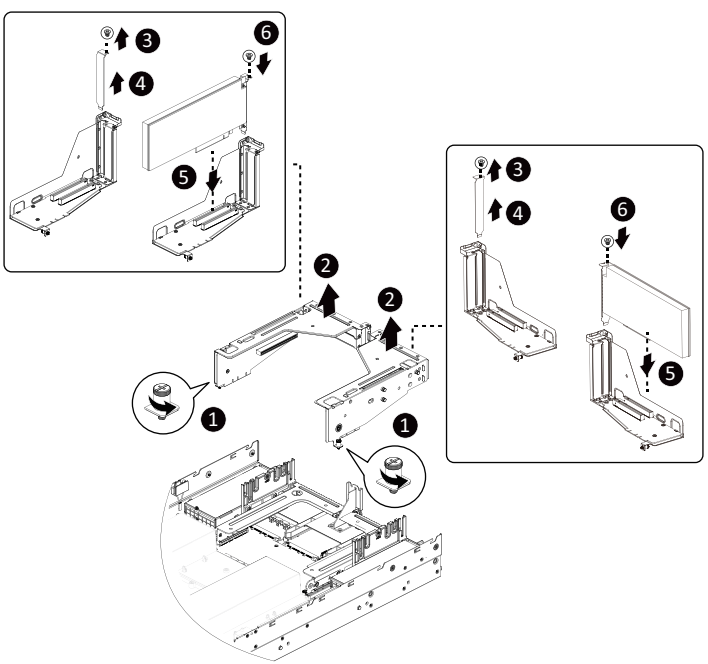

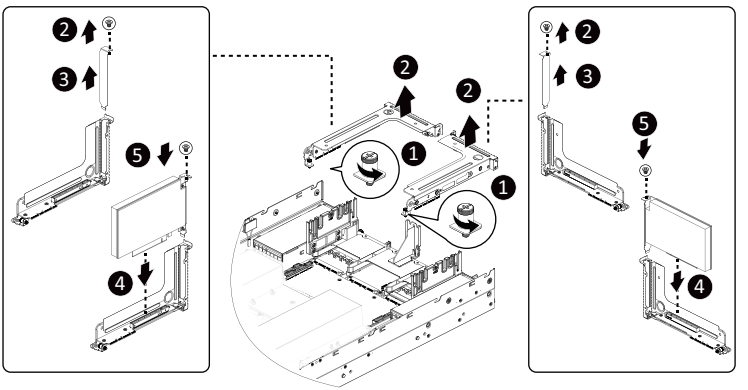
2
3
5
4
2
2
1
1
2
3
5
4

3-8 Installing the Mezzanine Card

3-8-1 Installing the OCP 3.0 Mezzanine Card

Use of the following type of OCP 3.0 NIC is recommended:

- OCP 3.0 SFF with pull tab
- OCP 3.0 SFF with ejector latch

Follow these instructions to install an OCP 3.0 Mezzanine card:

1. Remove the two screws securing the OCP 3.0 card slot cover.
2. Remove the slot cover from the system.
3. Insert the OCP 3.0 card into the card slot ensuring that the card is firmly connected to the connector on the motherboard.
4. Tighten the thumbnail screw to secure the OCP 3.0 card in place.
5. Reverse steps 3-4 to replace the OCP 3.0 card.

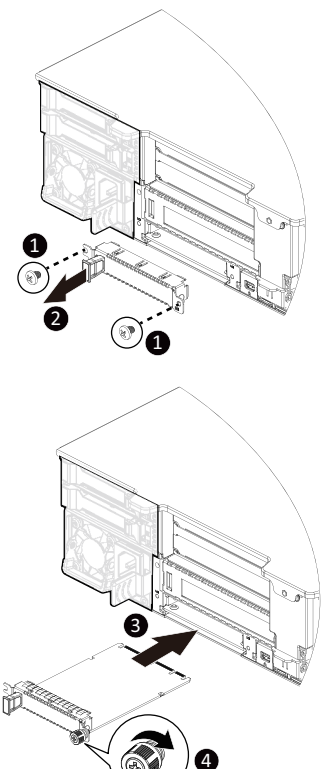

3-9 Installing the M.2 Device and Heat Sink

CAUTION

The position of the stand-off screw will depend on the size of the M.2 device. The stand-off screw is pre-installed for 22110 cards as standard. Refer to the size of the M.2 device and change the position of the stand-off screw accordingly.

Follow these instructions to install the M.2 device:

1. Insert the M.2 SSD module into the slot.
2. Secure it with the screw, tightening as necessary to fasten the M.2 SSD module in place.

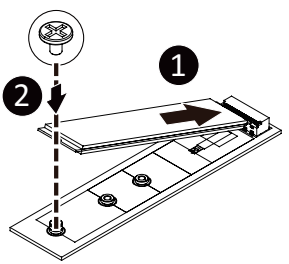

3-9-1 M.2 device with Heatsink

WARNING:

Please ensure a heatsink is attached to any M.2 device installed into the system. Installing an M.2 device without any heatsink may result in the system overheating or system performance being throttled.

- Please Go to for specific M.2 Slot location.
- To install/remove the M.2 module and Heatsink use a No. 1 Phillips-head screwdriver with a screw torque of 1.5 ± 0.2 kgf*cm

Follow these instructions to install the M.2 device and heat sink:

1. Insert the M.2 device into the M.2 connector.
2. Press down on the M.2 device.
3. Install the thermal pad of the M.2 device to the M.2 device.
4. Press down on the thermal pad.
5. Secure the M.2 device and its thermal pad to the motherboard with a single screw.
6. Reverse steps 1-2 to remove the M.2 device.

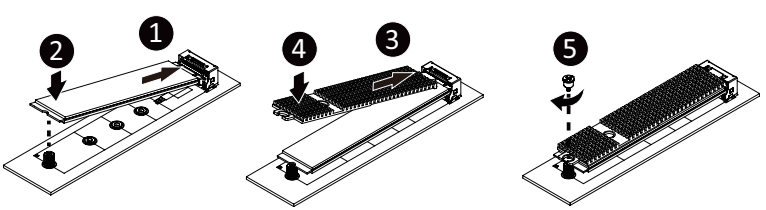

3-10 Replacing the Fan Assembly

- Voltages can be present within the server whenever an AC power source is connected. This voltage is present even when the main power switch is in the off position. Ensure that the system is powered-down and all power sources have been disconnected from the server prior to replacing a system fan.

Failure to observe these warnings could result in personal injury or damage to equipment.

Follow these instructions to replace a fan assembly:

1. Flip the latches on the top of the fan outwards.
2. Using the latches, lift up the fan assembly from the chassis.
3. Reverse the previous steps to install the replacement fan assembly.

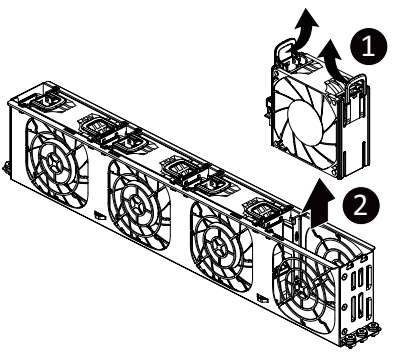

3-11 Removing and Installing the Power Supply

Follow these instructions to replace the power supply:

1. Flip up and then grasp the power supply handle.
2. Press the retaining clip on the right side of the power supply unit in the direction indicated.
3. Pull out the power supply unit using the handle.
4. Insert the replacement power supply unit firmly into the chassis. Connect the AC power cord to the replacement power supply.
5. Repeat steps 1-4 for replacement of the second power supply.

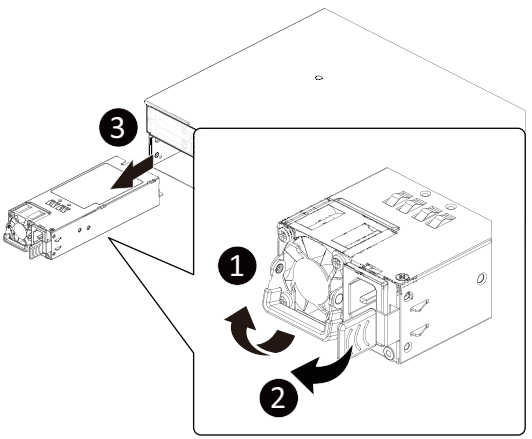

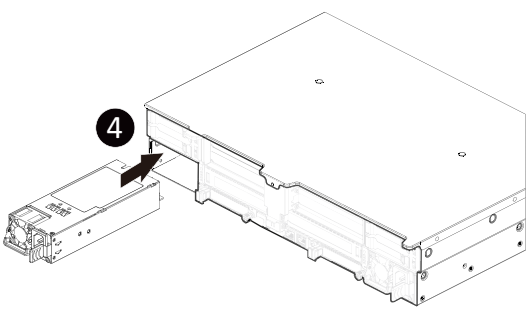

3-12 Cable Routing

3-11-1 R283-Z90-AAD1

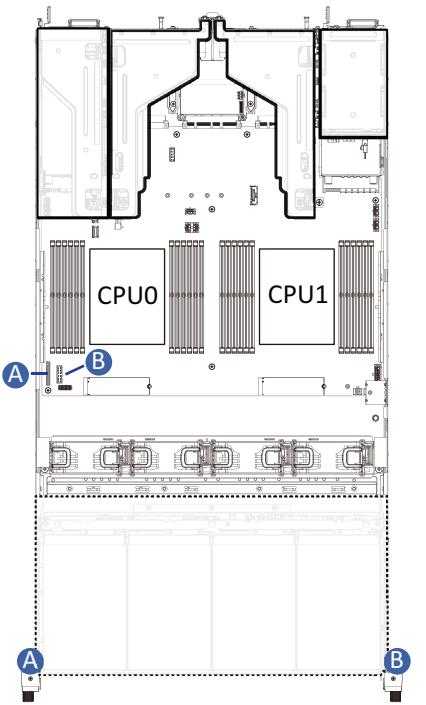

A	Front Panel LEDs and Buttons Cable	Motherboard: FP_1 Front IO Board: FP_1
		Front IO Board: FP_1
B	Front Panel USB 3 Ports Cable	Motherboard: FUSB_1
		--

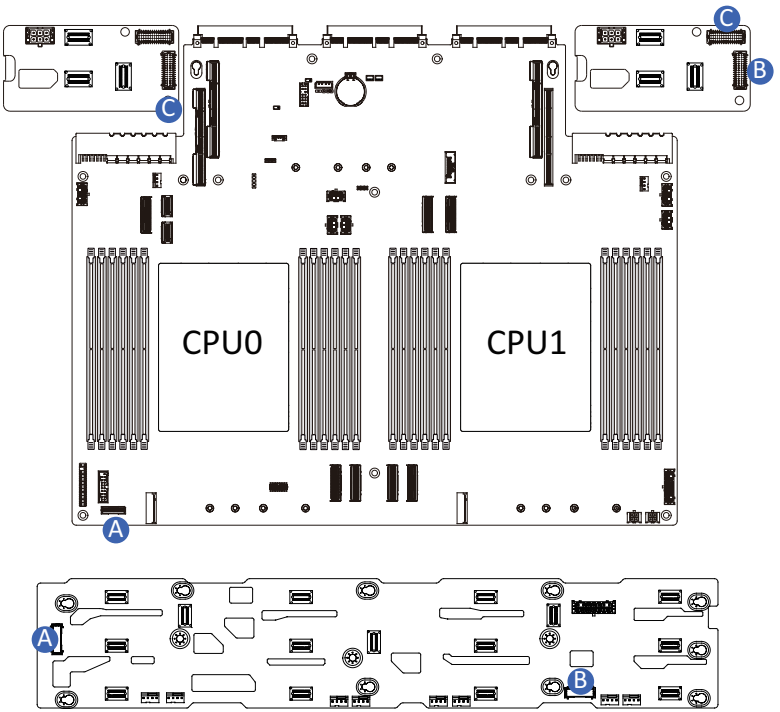

A	HDD Backplane Board Signal Cable	Motherboard: BP_1
		F/ HDD Board: BP_1
B	HDD Backplane Board Signal Cable	F/ HDD Board: BP_SERIES
		R/ HDD Board: BP_1
C	HDD Backplane Board Signal Cable	R/ HDD Board: BP_SERIES
		R/ HDD Board: BP_1

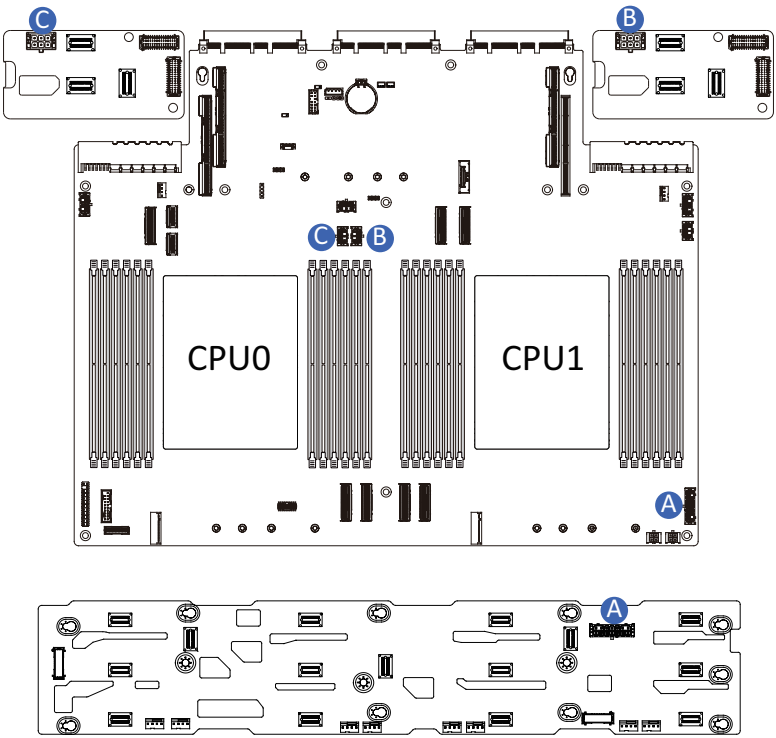

A	HDD Backplane Board Power Cable	Motherboard: BP_ATX1
		F/ HDD Board: ATX1
B	HDD Backplane Board Power Cable	Motherboard: BP_ATX2
		R/ HDD Board: BP_2X3
C	HDD Backplane Board Power Cable	Motherboard: BP_ATX4
		R/ HDD Board: BP_2X3

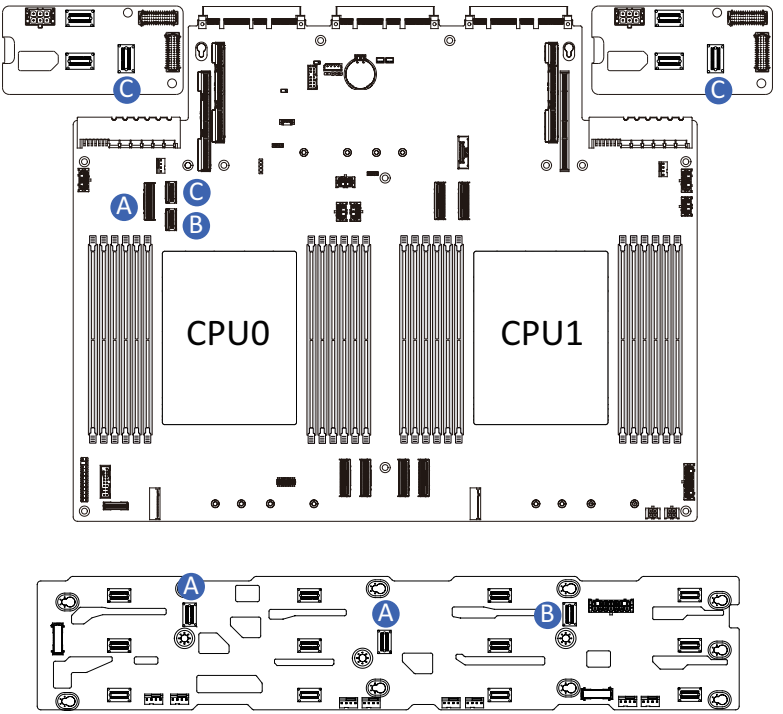

A	SATA Cable	Motherboard: P0_MCIO_0
		F/ HDD Board: SL_SAS0 SL_SAS1
B	SATA Cable	Motherboard: P0_MCIO_1
		F/ HDD: SL_SAS2
C	SATA Cable	Motherboard: P0_MCIO_2
		R/ HDD Board: SL_SAS0 SL_SAS0

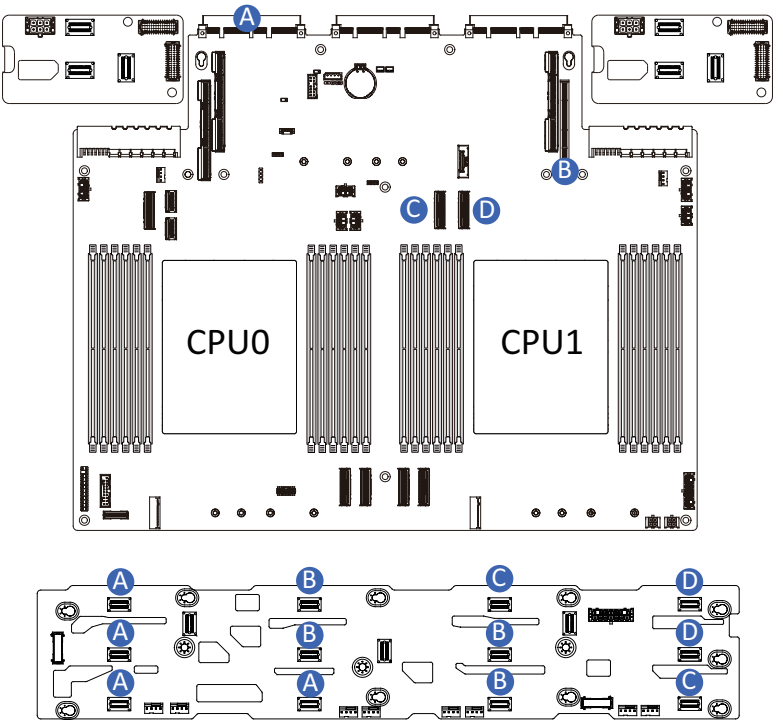

A	NVMe 0-3 Cable	Motherboard: OCP1	**C**	NVMe 8-9 Cable	Motherboard: P1_MCIO_0
		F/ HDD Board: Top to bottom/Right to Left: U.2 0 U.2 1 U.2 2 U.2 3			F/ HDD Board: U.2 8 U.2 9
B	NVMe 4-7 Cable	Riser Card CRS101Q	**D**	NVMe 10-11 Cable	Motherboard: P1_MCIO_1
		F/ HDD Board: Top to bottom/Right to Left: U.2 4 U.2 5 U.2 6 U.2 7			F/ HDD Board: U.2 10 U.2 11

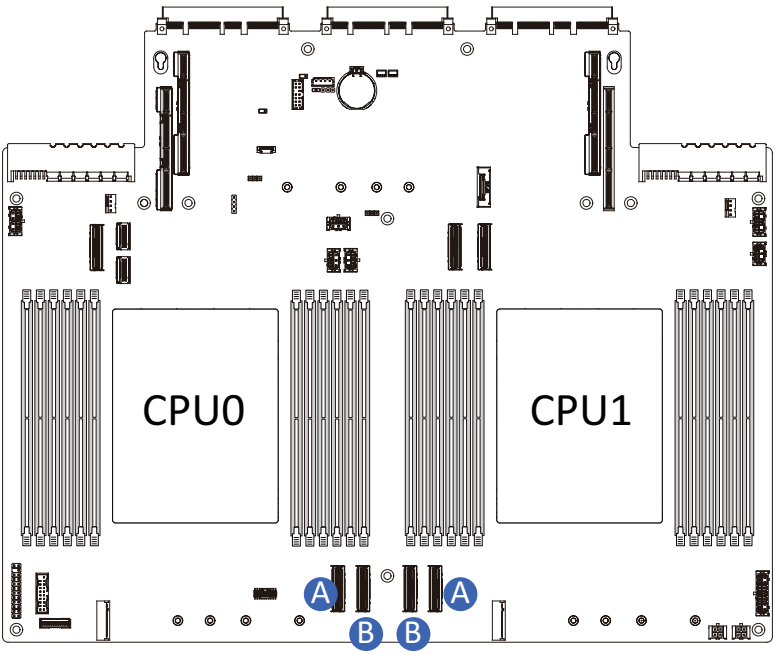

A	XGMI CPU1 Cable	Motherboard: MCIO_G1_0
		Motherboard: MCIO_G0_1
B	XGMI CPU0 Cable	Motherboard: MCIO_G1_1
		Motherboard: MCIO_G0_0

3-12-1 R283-Z90-AAD2

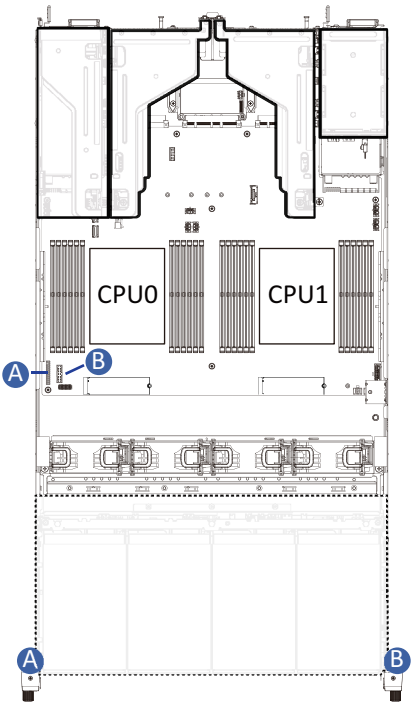

A	Front Panel LEDs and Buttons Cable	Motherboard: FP_1 Front IO Board: FP_1
		Front IO Board: FP_1
B	Front Panel USB 3 Ports Cable	Motherboard: FUSB_1
		--

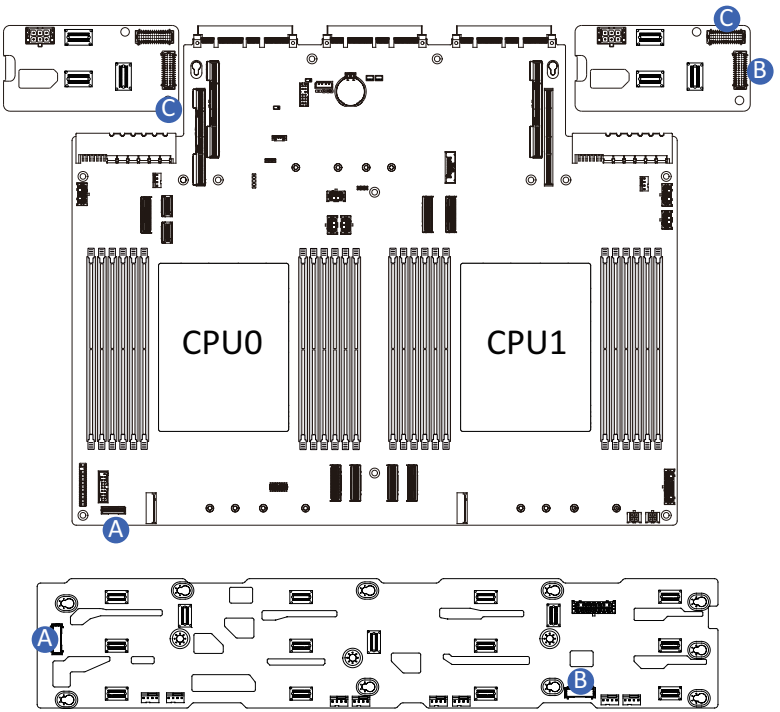

A	HDD Backplane Board Signal Cable	Motherboard: BP_1
		F/ HDD Board: BP_1
B	HDD Backplane Board Signal Cable	F/ HDD Board: BP_SERIES
		R/ HDD Board: BP_1
C	HDD Backplane Board Signal Cable	R/ HDD Board: BP_SERIES
		R/ HDD Board: BP_1

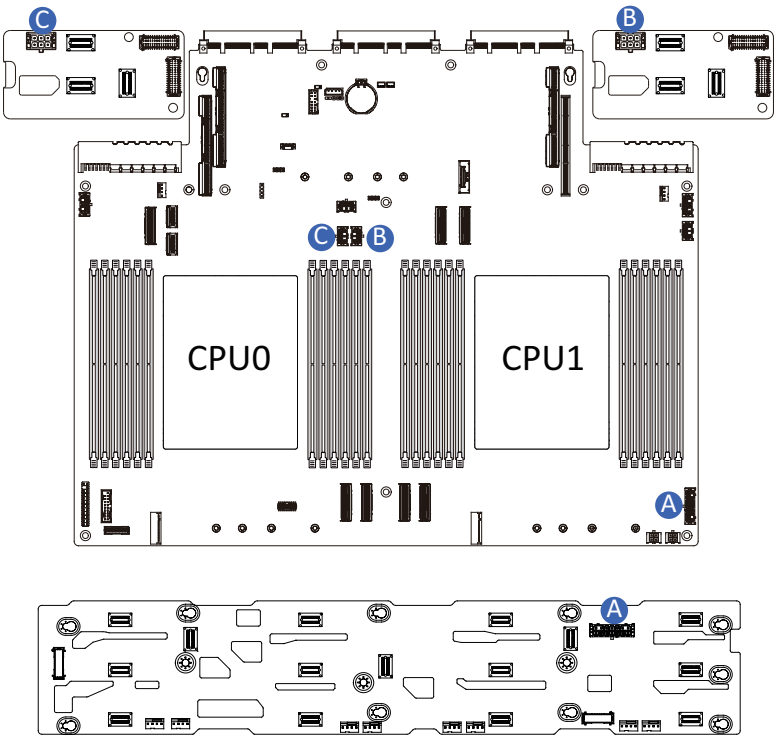

A	HDD Backplane Board Power Cable	Motherboard: BP_ATX1
		F/ HDD Board: ATX1
B	HDD Backplane Board Power Cable	Motherboard: BP_ATX2
		R/ HDD Board: BP_2X3
C	HDD Backplane Board Power Cable	Motherboard: BP_ATX4
		R/ HDD Board: BP_2X3

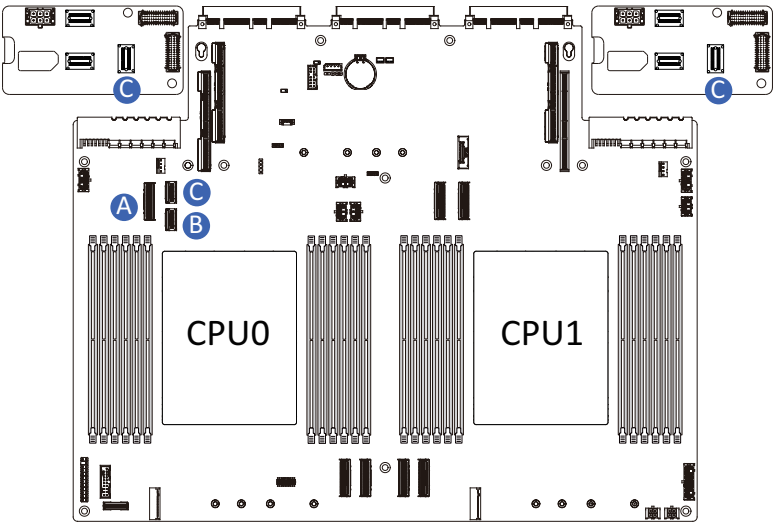

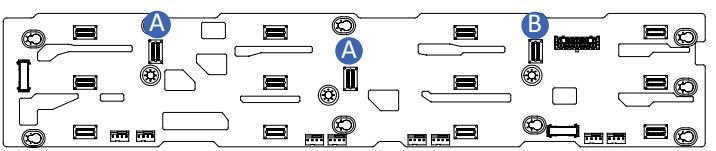

A	SATA Cable	Motherboard: P0_MCIO_0
		F/ HDD Board: SL_SAS0 SL_SAS1
B	SATA Cable	Motherboard: P0_MCIO_1
		F/ HDD: SL_SAS2
C	SATA Cable	Motherboard: P0_MCIO_2
		R/ HDD Board: SL_SAS0 SL_SAS0

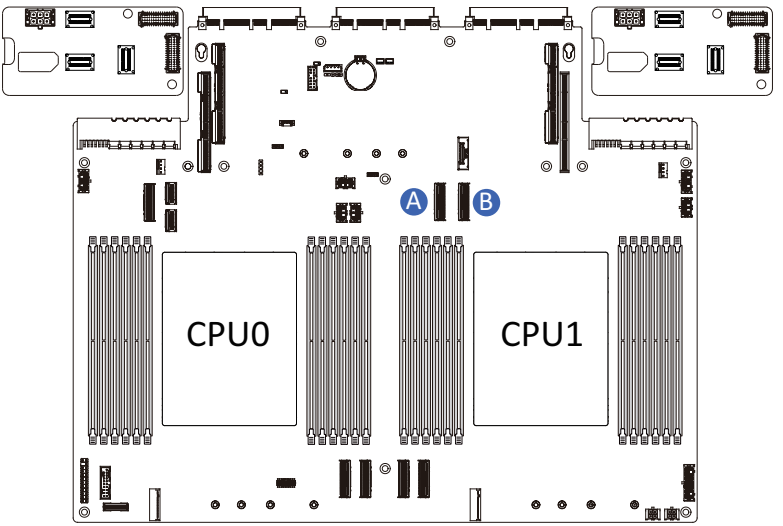

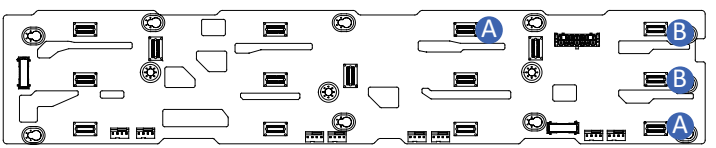

A	NVMe 8-9 Cable	Motherboard: P1_MCIO_0
		F/ HDD Board: U.2 8 U.2 9
B	NVMe 10-11 Cable	Motherboard: P1_MCIO_1
		F/ HDD Board: U.2 10 U.2 11

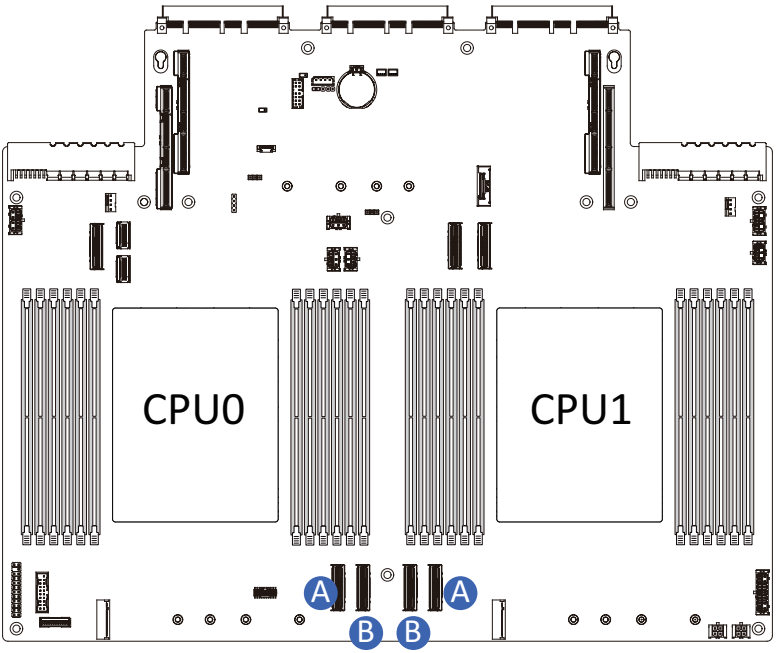

A	XGMI CPU1 Cable	Motherboard: MCIO_G1_0
		Motherboard: MCIO_G0_1
B	XGMI CPU0 Cable	Motherboard: MCIO_G1_1
		Motherboard: PMCIO_G0_0

3-12-2 R283-Z90-AAD3

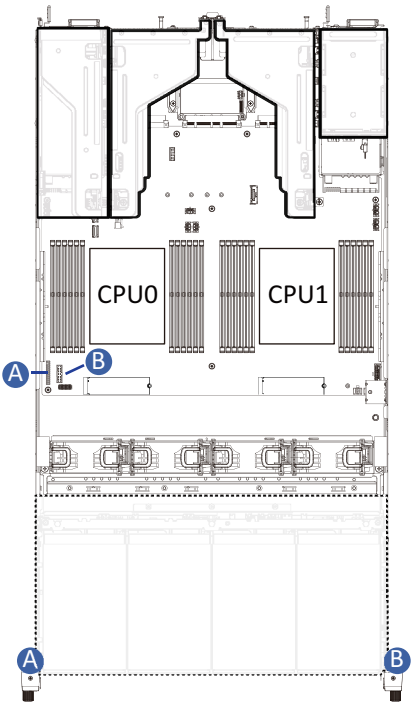

A	Front Panel LEDs and Buttons Cable	Motherboard: FP_1 Front IO Board: FP_1
		Front IO Board: FP_1
B	Front Panel USB 3 Ports Cable	Motherboard: FUSB_1
		--

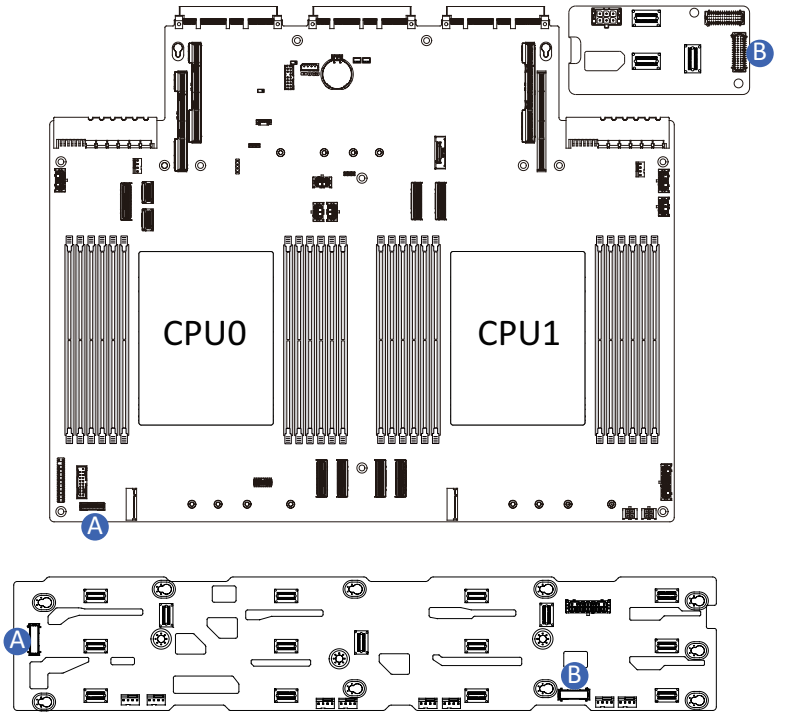

A	HDD Backplane Board Signal Cable	Motherboard: BP_1
		F/ HDD Board: BP_1
B	HDD Backplane Board Signal Cable	F/ HDD Board: BP_SERIES
		R/ HDD Board: BP_1

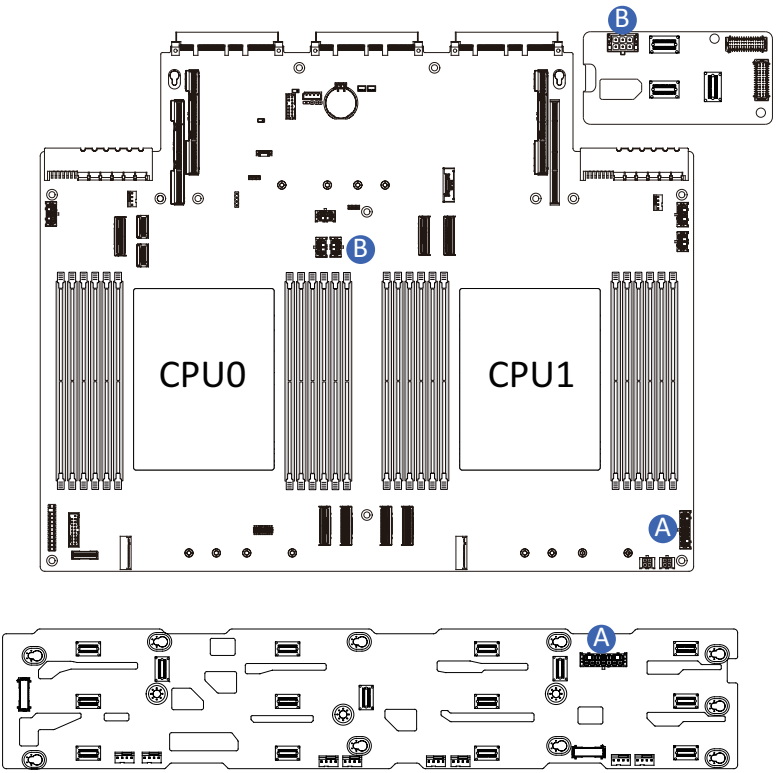

A	HDD Backplane Board Power Cable	Motherboard: BP_ATX1
		F/ HDD Board: ATX1
B	HDD Backplane Board Power Cable	Motherboard: BP_ATX2
		R/ HDD Board: BP_2X3

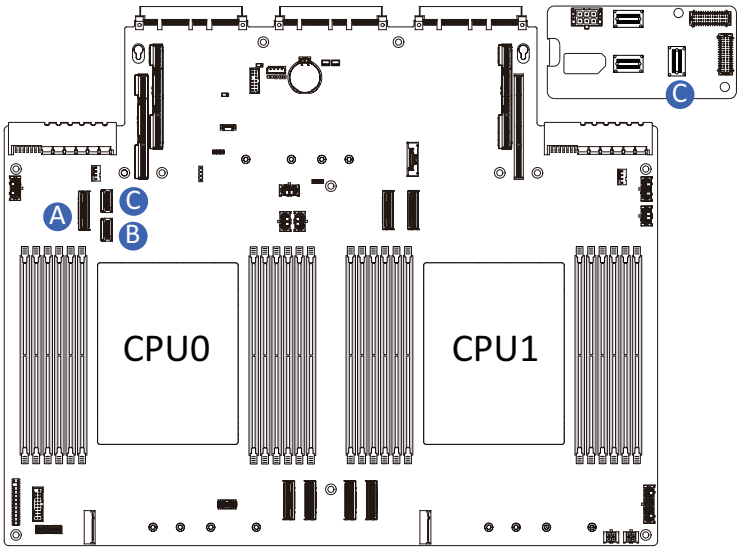

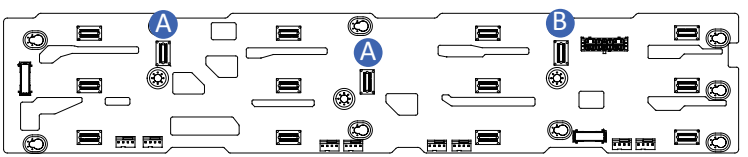

A	SATA Cable	Motherboard: P0_MCIO_0
		F/ HDD Board: SL_SAS0 SL_SAS1
B	SATA Cable	Motherboard: P0_MCIO_1
		F/ HDD: SL_SAS2
C	SATA Cable	Motherboard: P0_MCIO_2
		R/ HDD Board: SL_SAS0

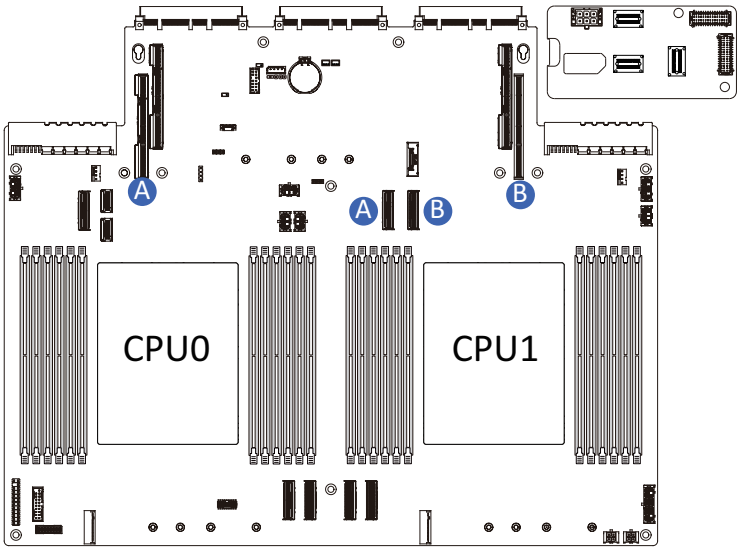

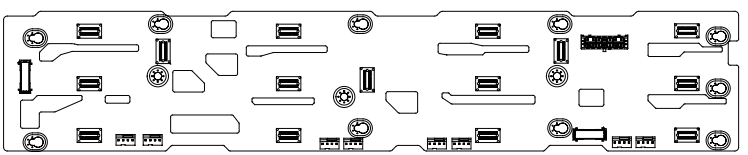

A	Riser Card Cable	Motherboard: P1_MCIO_0
		Motherboard Slot: SLOT1
B	Riser Card Cable	Motherboard: P1_MCIO_1
		CRS202N

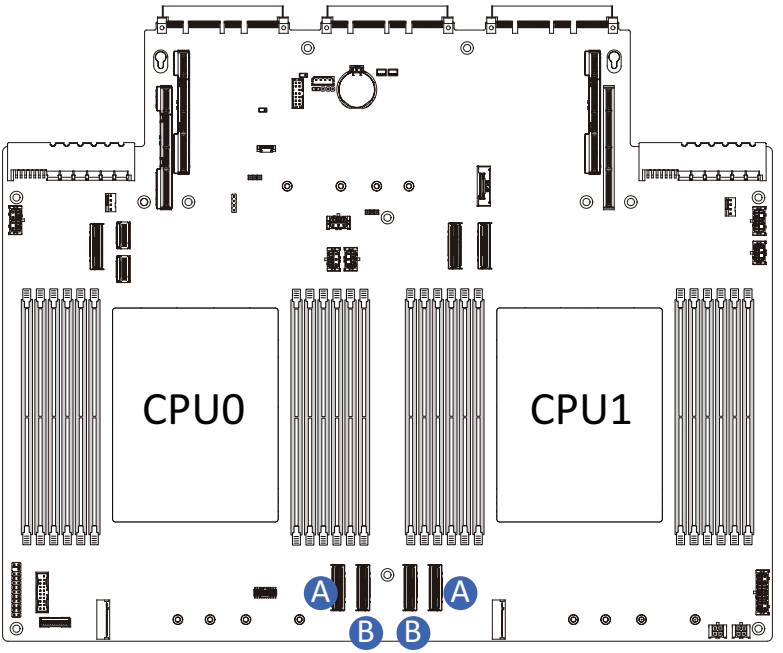

A	XGMI CPU1 Cable	Motherboard: MCIO_G1_0
		Motherboard: MCIO_G0_1
B	XGMI CPU0 Cable	Motherboard: MCIO_G1_1
		Motherboard: MCIO_G0_0

Chapter 4 Motherboard Components

4-1 Motherboard Components

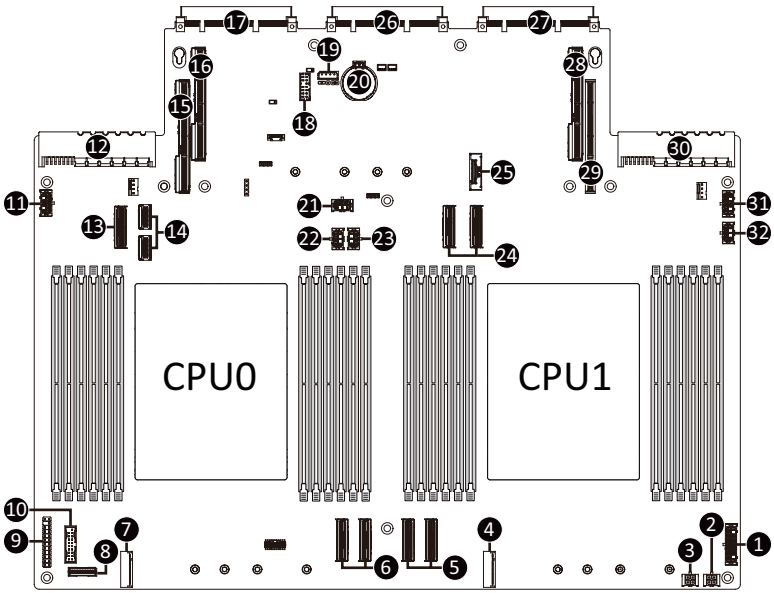

Item	Description
1	2 x 7 Pin ATX Backplane Power Connector
2	2 x 2 Pin P12V Backplane Power Connector
3	2 x 2 Pin P12V Backplane Power Connector
4	M.2 Slot (PCIe Gen3 x2, Supports NGFF-22110)
5	MCIO Connector (MCIO_G1_0/1)
6	MCIO Connector (MCIO_G0_0/1)
7	M.2 Slot (PCIe Gen3 x4, Supports NGFF-22110)
8	HDD Backplane Board Connector
9	Front Panel Connector
10	Front Panel USB 3.2 Gen1 Connector
11	2 x 4 Pin P12V GPU Power Connector
12	Power Supply Connector#1 (Primary)
13	MCIO Connector (P0_MCIO_0/SATA or PCIe/By SKU)
14	MCIO Connector (P0_MCIO_1/2/SATA or PCIe/By SKU)
15	Riser Connector #1 (PCIe x16)
16	Riser Connector #2 (PCIe x16)
17	OCP 3.0 Connector (PCIe Gen5 x16)
18	TPM Module Connector (SPI Interface)
19	IPMB Connector

Item	Description
20	System Battery
21	2 x 3 Pin ATX Backplane Power Connector
22	2 x 3 Pin ATX Backplane Power Connector
23	2 x 3 Pin ATX Backplane Power Connector
24	MCIO Connector (P1_MCIO_0/1)
25	M.2 Slot (PCIe Gen3 x4, NGFF-22110/Supports heatsink)
26	G-SC Module Connector
27	OCP 3.0 Connector (PCIe Gen5 x16)
28	Riser Connector #3 (PCIe x16)
29	Riser Connector #4 (PCIe x16)
30	Power Supply Connector#2 (Secondary)
31	2 x 4 Pin P12V GPU Power Connector
32	2 x 3 Pin ATX Backplane Power Connector

4-2 Jumper Settings

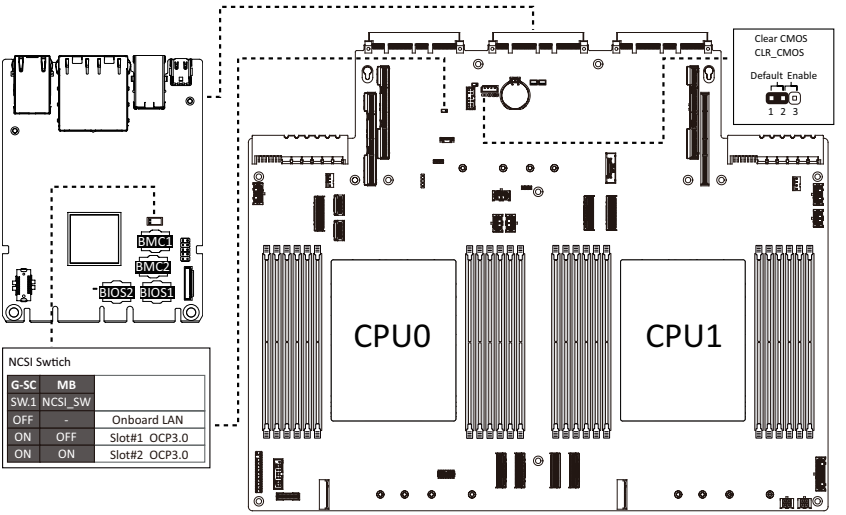

J1		ON	OFF
1	HOST_SMBUS_SEL	BIOS defined	
2	Reserved	Reserved	
3	BIOS_PWD	Clear supervisor password	Normal [Default]
4	BIOS_RCVR	BIOS recovery mode	Normal [Default]

4-3 G-SC Module

4-3-1 CDCR114

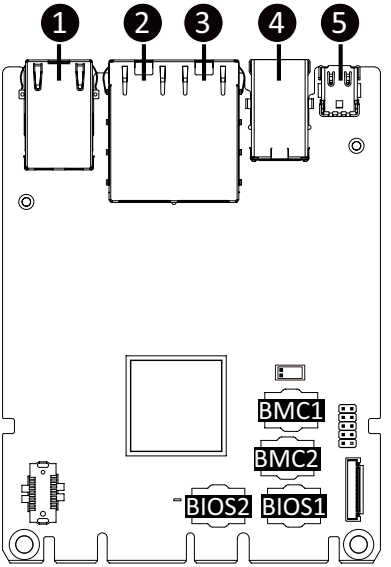

Item	Description
1	10/100/1000 Server Management LAN Port
2	1GbE LAN Port #2
3	1GbE LAN Port #1
4	USB 3.2 Gen1 Port x 2
5	Mini DP Port

4-4 Backplane Board Storage Connector

4-4-1 CBP20C5 (Front System Storage Board)

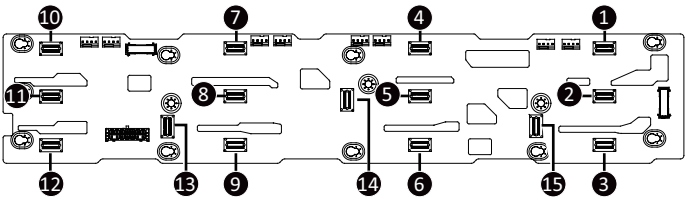

Item	Description
1	SlimLine SAS Connector (SFF-8654 4i/U.2_0)
2	SlimLine SAS Connector (SFF-8654 4i/U.2_1)
3	SlimLine SAS Connector (SFF-8654 4i/U.2_2)
4	SlimLine SAS Connector (SFF-8654 4i/U.2_3)
5	SlimLine SAS Connector (SFF-8654 4i/U.2_4)
6	SlimLine SAS Connector (SFF-8654 4i/U.2_5)
7	SlimLine SAS Connector (SFF-8654 4i/U.2_6)
8	SlimLine SAS Connector (SFF-8654 4i/U.2_7)
9	SlimLine SAS Connector (SFF-8654 4i/U.2_8)
10	SlimLine SAS Connector (SFF-8654 4i/U.2_9)
11	SlimLine SAS Connector (SFF-8654 4i/U.2_10)
12	SlimLine SAS Connector (SFF-8654 4i/U.2_11)
13	SlimLine SAS Connector (SFF-8654 4i/SL_SAS2)
14	SlimLine SAS Connector (SFF-8654 4i/SL_SAS1)
15	SlimLine SAS Connector (SFF-8654 4i/SL_SAS0)

4-4-2 CBP2022 (Rear System Storage Board)

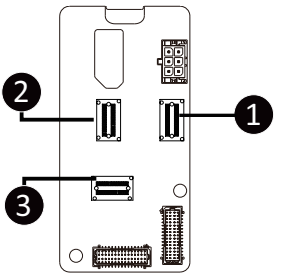

Item	Description
1	SlimLine SAS Connector (SFF-8654 4i/U_2_0)
2	SlimLine SAS Connector (SFF-8654 4i/U_2_1)
3	SlimLine SAS Connector (SFF-8654 4i/SL_SAS0)

Chapter 5 BIOS Setup

BIOS (Basic Input and Output System) records hardware parameters of the system in the EFI on the motherboard. Its major functions include conducting the Power-On Self-Test (POST) during system startup, saving system parameters, loading the operating system etc. The BIOS includes a BIOS Setup program that allows the user to modify basic system configuration settings or to activate certain system features. When the power is turned off, the battery on the motherboard supplies the necessary power to the CMOS to keep the configuration values in the CMOS.

To access the BIOS Setup program, press the <DEL> key during the POST when the power is turned on.



- BIOS flashing is potentially risky, if you do not encounter any problems when using the current BIOS version, it is recommended that you don't flash the BIOS. To flash the BIOS, do it with caution. Inadequate BIOS flashing may result in system malfunction.
- It is recommended that you not alter the default settings (unless you need to) to prevent system instability or other unexpected results. Inadequately altering the settings may result in system's failure to boot. If this occurs, try to clear the CMOS values and reset the board to default values. (Refer to the **Exit** section in this chapter or introductions of the battery/clearing CMOS jumper in Chapter 4 for how to clear the CMOS values.)

BIOS Setup Program Function Keys

<←><→>	Move the selection bar to select the screen
<↑><↓>	Move the selection bar to select an item
<+>	Increase the numeric value or make changes
<->	Decrease the numeric value or make changes
<Enter>	Execute command or enter the submenu
<Esc>	Main Menu: Exit the BIOS Setup program Submenus: Exit current submenu
<F1>	Show descriptions of general help
<F3>	Restore the previous BIOS settings for the current submenus
<F9>	Load the Optimized BIOS default settings for the current submenus
<F10>	Save all the changes and exit the BIOS Setup program

- **Main**
  This setup page includes all the items of the standard compatible BIOS.
- **Advanced**
  This setup page includes all the items of AMI BIOS special enhanced features.
  (ex: Auto detect fan and temperature status, automatically configure hard disk parameters.)
- **AMD CBS**
  This setup page includes the common items for configuration of AMD motherboard-related information.
- **AMD PBS Option**
  This setup page includes the common items for configuration of AMD CPM RAS related settings.
- **Chipset**
  This setup page includes all the submenu options for configuring the functions of the North Bridge.
- **Server Management**
  Server additional features enabled/disabled setup menus.
- **Security**
  Change, set, or disable supervisor and user password. Configuration supervisor password allows you to restrict access to the system and BIOS Setup.
  A supervisor password allows you to make changes in BIOS Setup.
  A user password only allows you to view the BIOS settings but not to make changes.
- **Boot**
  This setup page provides items for configuration of the boot sequence.
- **Save & Exit**
  Save all the changes made in the BIOS Setup program to the CMOS and exit BIOS Setup. (Pressing <F10> can also carry out this task.)
  Abandon all changes and the previous settings remain in effect. Pressing <Y> to the confirmation message will exit BIOS Setup. (Pressing <Esc> can also carry out this task.)

5-1 The Main Menu

Once you enter the BIOS Setup program, the Main Menu (as shown below) appears on the screen. Use arrow keys to move among the items and press <Enter> to accept or enter other sub-menu.

Main Menu Help

The on-screen description of a highlighted setup option is displayed on the bottom line of the Main Menu.

Submenu Help

While in a submenu, press <F1> to display a help screen (General Help) of function keys available for the menu. Press <Esc> to exit the help screen. Help for each item is in the Item Help block on the right side of the submenu.

- When the system is not stable as usual, select the **Restore Defaults** item to set your system to its defaults.
- The BIOS Setup menus described in this chapter are for reference only and may differ by BIOS version.



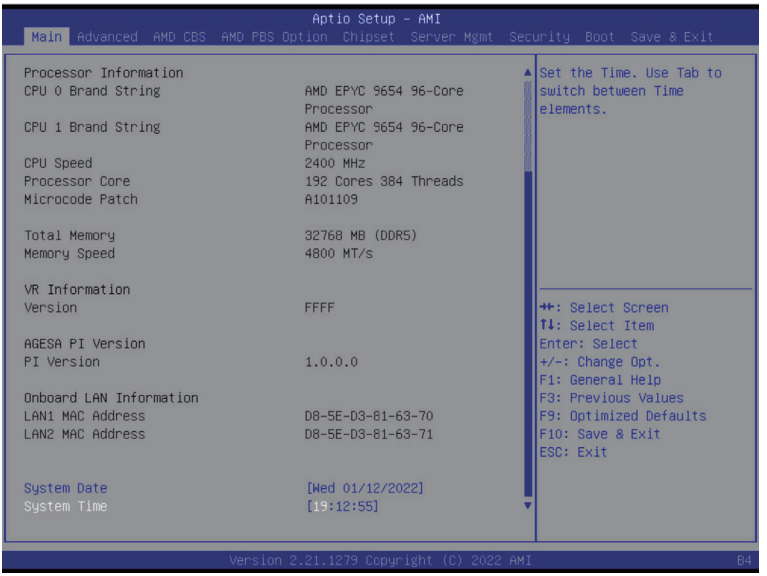

Parameter	Description
BIOS Information	
Project Name	Displays the project name information.
Project Version	Displays version number of the BIOS setup utility.
Build Date and Time	Displays the date and time when the BIOS setup utility was created.
BMC Information(Note1)	
BMC Firmware Version(Note1)	Displays BMC firmware version information.
Processor Information	
CPU Brand String/ CPU Speed / Processor Core / Microcode Patch	Displays the technical specifications for the installed processor(s).
Total Memory(Note2)	Displays the total memory size of the installed memory.
Memory Speed(Note2)	Displays the frequency information of the installed memory.
VR Information Version	Displays VR version information.
AGESA PI Version	
PI Version	Displays AGESA PI version information.

(Note1) Functions available on selected models.

(Note2) This section will display capacity and frequency information of the memory that the customer has installed.

Parameter	Description
Onboard LAN Information	
LAN1 MAC Address(Note)	Displays LAN MAC address information.
LAN2 MAC Address(Note)	Displays LAN MAC address information.
System Date	Sets the date following the weekday-month-day-year format.
System Time	Sets the system time following the hour-minute-second format.

(Note) The number of LAN ports listed will depend on the motherboard / system model.

5-2 Advanced Menu

The Advanced Menu displays submenu options for configuring the function of various hardware components. Select a submenu item, then press <Enter> to access the related submenu screen.

When Boot Mode Select is set to UEFI (Default)

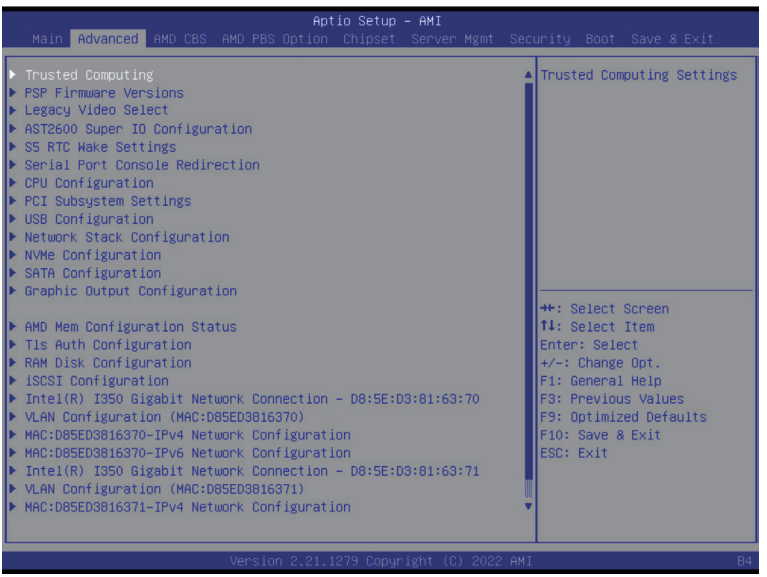

When "Boot Mode Select" is set to Legacy in the Boot > Boot Mode Select section

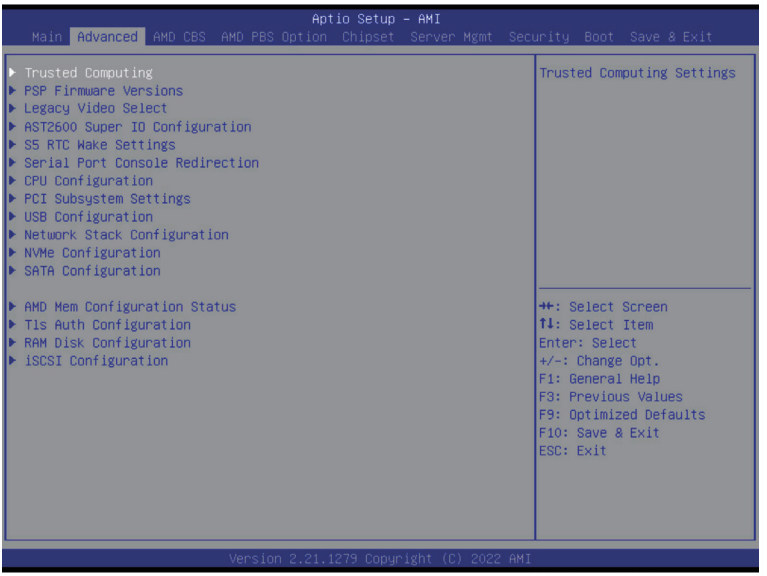

5-2-1 Trusted Computing

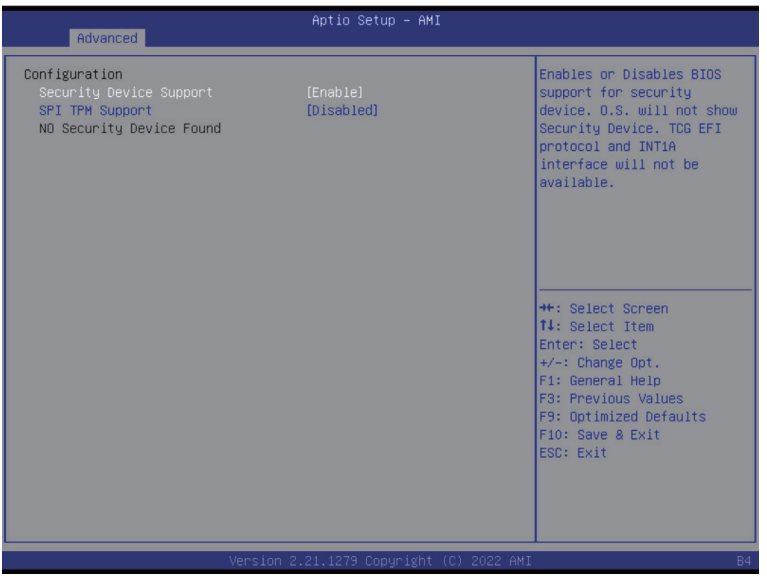

Parameter	Description
Configuration	
Security Device Support	Enable/Disable BIOS support for security device. OS will not show security device. TCG EFI protocol and INT1A interface will not be available. Options available: Disable, Enable. Default setting is **Enable**.
SPI TPM Support	Select Enable to activate TPM support feature. Options available: Disabled, Enabled. Default setting is **Disabled**.

5-2-2 PSP Firmware Versions

The PSP Firmware Versions page displays the basic PSP firmware version information. Items on this window are non-configurable.

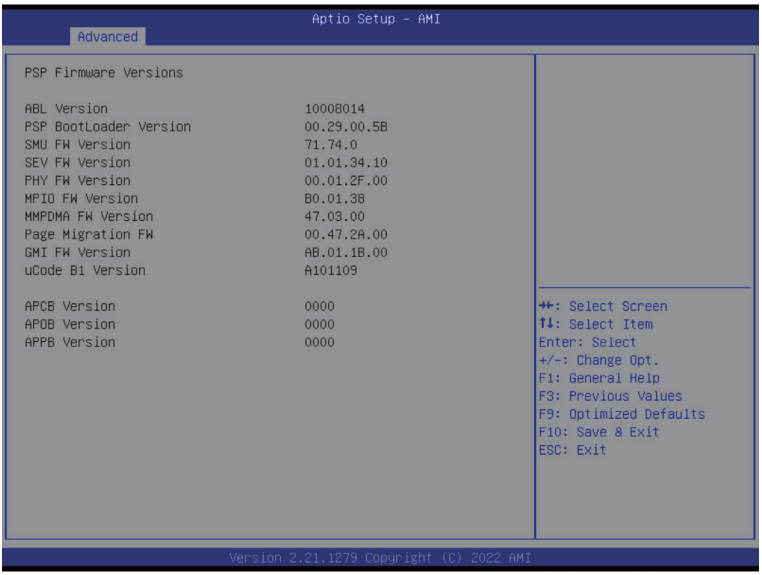

5-2-3 Legacy Video Select

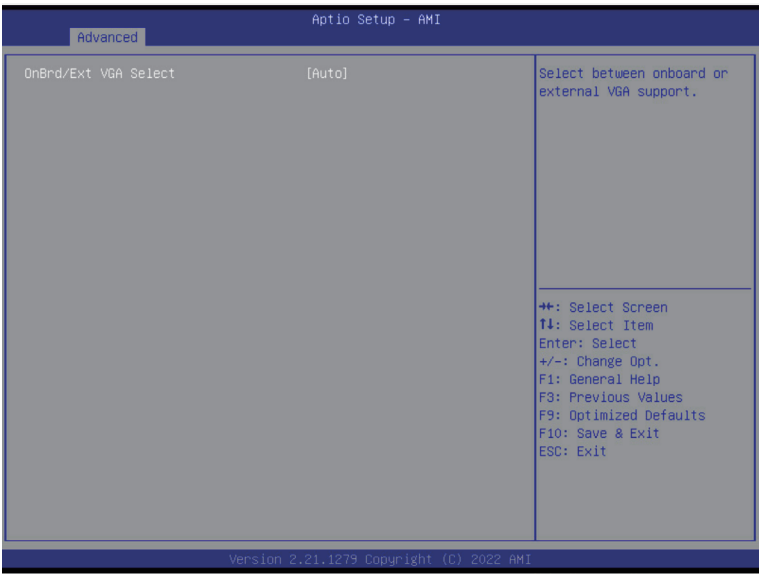

Parameter	Description
OnBrd/Ext VGA Select	Selects between onboard or external VGA support. Options available: Auto, Onboard, External. Default setting is **Auto**.

(Note) This configurable option will be displayed when **"Boot Mode Select"** is set to **Legacy** in the **Boot > Boot Mode Select section.**

5-2-4 AST2600 Super IO Configuration

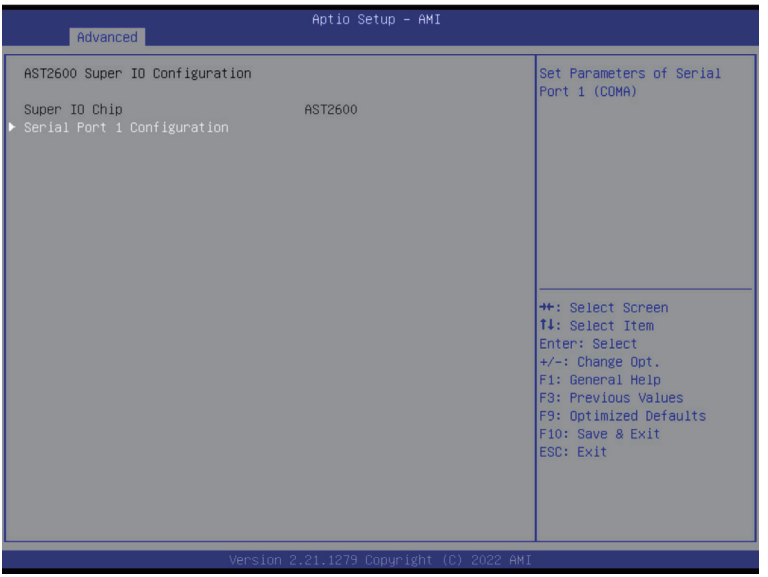

Parameter	Description
AST2600 Super IO Configuration	
Super IO Chip	Displays the super IO chip information
Serial Port 1 Configuration	Press [Enter] for configuration of advanced items.

5-2-4-1 Serial Port 1 Configuration



Parameter	Description
Serial Port 1 Configuration	
Serial Port(Note)	Enable/Disable the Serial Port (COM). When set to Enabled allows you to configure the Serial port 1 settings. When set to Disabled, displays no configuration for the serial port. Options available: Disabled, Enabled. Default setting is **Enabled**.
Devices Settings	Displays the Serial Port 1 device settings.
Change Settings	Select an optimal settings for Super IO Device. Options available for Serial Port 1: Auto IO=3F8h; IRQ=4; IO=3F8h; IRQ=3, 4, 5, 6, 7, 9, 10, 11, 12; IO=2F8h; IRQ=3, 4, 5, 6, 7, 9, 10, 11, 12; IO=3E8h; IRQ=3, 4, 5, 6, 7, 9, 10, 11, 12; IO=2E8h; IRQ=3, 4, 5, 6, 7, 9, 10, 11, 12; Default setting is **Auto**.

(Note) Advanced items prompt when this item is defined.

5-2-5 S5 RTC Wake Settings



Parameter	Description
Wake System from S5	Enable/Disable system wake on alarm event. Options available: Disabled, Fixed Time, Dynamic Time. When Fixed Time is selected, system will wake on the hr::min::sec specified. Default setting is **Disabled**.

5-2-6 Serial Port Console Redirection

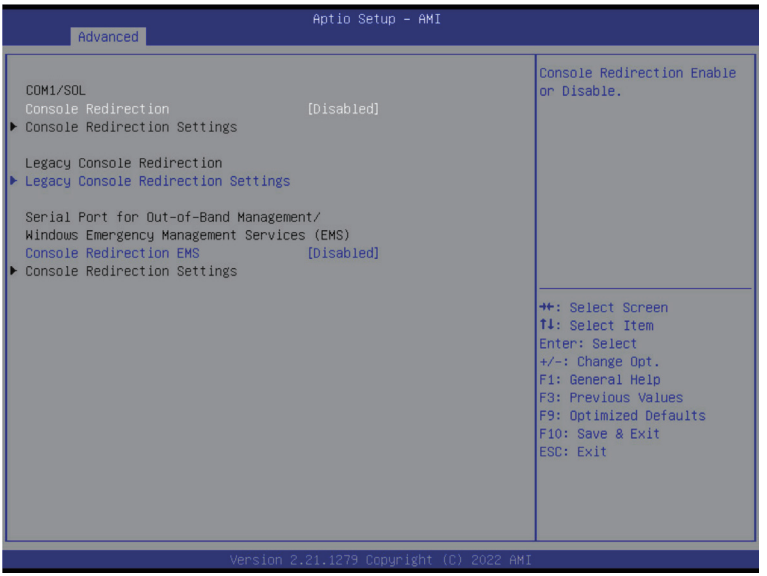

Parameter	Description
COM1/Serial Over LAN Console Redirection(Note)	Select whether to enable console redirection for specified device. Console redirection enables the users to manage the system from a remote location. Options available: Enabled, Disabled. Default setting is **Disabled**.
COM1/Serial Over LAN Console Redirection Settings	Press [Enter] to configure advanced items. **Please note that this item is configurable when COM1/Serial Over LAN Console Redirection is set to Enabled.** ◆ Terminal Type – Selects a terminal type to be used for console redirection. – Options available: VT100, VT100+, ANSI, VT-UTF8. Default setting is **ANSI**. ◆ Bits per second – Selects the transfer rate for console redirection. – Options available: 9600, 19200, 38400, 57600, 115200. Default setting is **115200**. ◆ Data Bits – Selects the number of data bits used for console redirection. – Options available: 7, 8. Default setting is **8**.

(Note) Advanced items prompt when this item is defined.

Parameter	Description
COM1/Serial Over LAN Console Redirection Settings (continued)	◆ Parity – A parity bit can be sent with the data bits to detect some transmission errors. – Even: parity bit is 0 if the num of 1's in the data bits is even. – Odd: parity bit is 0 if num of 1's in the data bits is odd. – Mark: parity bit is always 1. Space: Parity bit is always 0. – Mark and Space Parity do not allow for error detection. – Options available: None, Even, Odd, Mark, Space. Default setting is **None**. ◆ Stop Bits – Stop bits indicate the end of a serial data packet. (A start bit indicates the beginning). The standard setting is 1 stop bit. Communication with slow devices may require more than 1 stop bit. – Options available: 1, 2. Default setting is **1**. ◆ Flow Control – Flow control can prevent data loss from buffer overflow. When sending data, if the receiving buffers are full, a 'stop' signal can be sent to stop the data flow. Once the buffers are empty, a 'start' signal can be sent to re-start the flow. Hardware flow control uses two wires to send start/stop signals. – Options available: None, Hardware RTS/CTS. Default setting is **None**. ◆ VT-UTF8 Combo Key Support – Enable/Disable the VT-UTF8 Combo Key Support. – Options available: Enabled, Disabled. Default setting is **Enabled**. ◆ Recorder Mode – When this mode enabled, only texts will be send. This is to capture Terminal data. – Options available: Enabled, Disabled. Default setting is **Disabled**. ◆ Resolution 100x31 – Enable/Disable extended terminal resolution. – Options available: Enabled, Disabled. Default setting is **Enabled**. ◆ Putty KeyPad – Selects Function Key and KeyPad on Putty. – Options available: VT100, LINUX, XTERMR6, SCO, ESCN, VT400. Default setting is **VT100**.

Parameter	Description
Legacy Console Redirection	
Legacy Console Redirection Settings	Press [Enter] to configure advanced items. ◆ Redirection COM Port – Selects a COM port for Legacy serial redirection. – Default setting is **COM1/SOL**. ◆ Resolution – Selects the number of rows and columns used in Console Redirection for legacy OS support. – Options available: 80x24, 80x25. Default setting is **80x24**. ◆ Redirect After POST – When Bootloader is selected, then Legacy Console Redirection is disabled before booting to legacy OS. When Always Enable is selected, then Legacy Console Redirection is enabled for legacy OS. – Options available: Always Enable, BootLoader. Default setting is **Always Enable**.
Serial Port for Out-of-Band Management / Windows Emergency Management Services (EMS) Console Redirection(Note)	EMS console redirection allows the user to configure Console Redirection Settings to support Out-of-Band Serial Port management. Options available: Disabled, Enabled. Default setting is **Disabled**.
Serial Port for Out-of-Band EMS Console Redirection Settings	Press [Enter] to configure advanced items. **Please note that this item is configurable when Serial Port for Out-of-Band Management EMS Console Redirection is set to Enabled.** ◆ Out-of-Band Mgmt Port – Microsoft Windows Emergency Management Service (EMS) allows for remote management of a Windows Server OS through a serial port. – Default setting is **COM1/SOL**. ◆ Terminal Type – Selects a terminal type to be used for console redirection. – Options available: VT100, VT100+, ANSI, VT-UTF8. Default setting is **ANSI**. ◆ Bits per second – Selects the transfer rate for console redirection. – Options available: 9600, 19200, 57600, 115200. Default setting is **115200**.

(Note) Advanced items prompt when this item is defined.

Parameter	Description
Serial Port for Out-of-Band EMS Console Redirection Settings(continued)	◆ Flow Control – Flow control can prevent data loss from buffer overflow. When sending data, if the receiving buffers are full, a 'stop' signal can be sent to stop the data flow. Once the buffers are empty, a 'start' signal can be sent to re-start the flow. Hardware flow control uses two wires to send start/stop signals. – Options available: None, Hardware RTS/CTS, Software Xon/Xoff. Default setting is **None**.

5-2-7 CPU Configuration

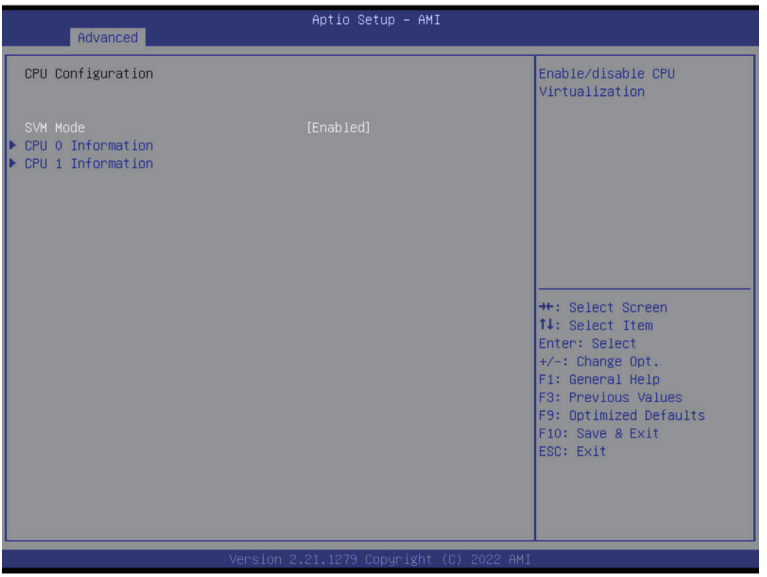

Parameter	Description
SVM Mode	Enable/Disable the CPU Virtualization. Options available: Disabled, Enabled. Default setting is **Enabled**.
CPU 0/1 Information	Press [Enter] to view the memory information related to CPU 0/1.

5-2-8 PCI Subsystem Settings

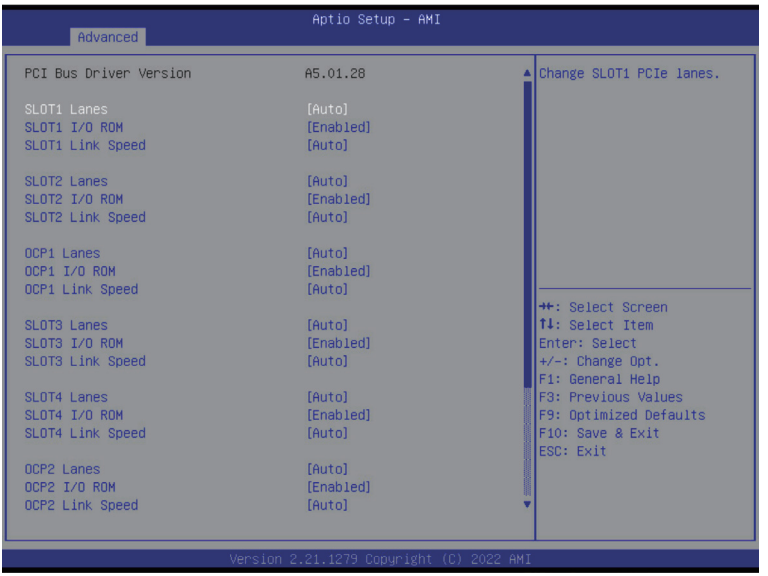

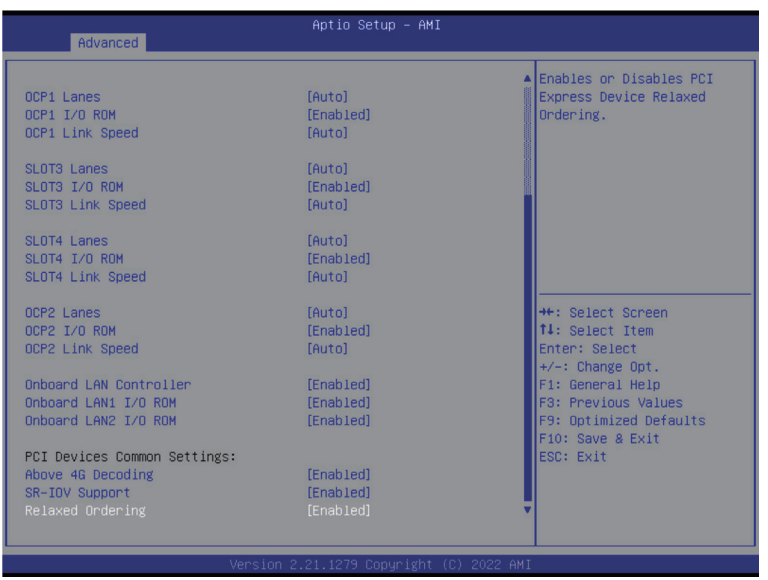

Parameter	Description
PCI Bus Driver Version	Displays the PCI Bus Driver version information.
SLOT#_Lanes Configuration(Note1)	Change the PCIe lanes. Options available: Disabled, Auto, x16, x8x8, x8x4x4, x4x4x8, x4x4x4x4. Default setting is **Auto**.
SLOT #_I/O ROM(Note1)	When enabled, this setting will initialize the device expansion ROM for the related PCI-E slot. Options available: Disabled, Enabled. Default setting is **Enabled**.
SLOT #_Link Speed(Note1)	Configure PCIe max link speed. Options available: Auto, Gen5, Gen4, Gen3, Gen2, Gen1. Default setting is **Auto**.
OCP#Lanes(Note2)	Change mezzanine PCIe lanes. Options available: Disabled, Auto, x16, x8x8, x8x4x4, x4x4x8, x4x4x4x4. Default setting is **Auto**.
OCP# I/O ROM(Note2)	When enabled, this setting will initialize the device expansion ROM for the related devices. Options available: Disabled, Enabled. Default setting is **Enabled**.
OCP# Link Speed(Note2)	Configure mezzanine OCP max link speed. Options available: Auto, Gen5, Gen4, Gen3, Gen2, Gen1. Default setting is **Auto**.
Onboard LAN Controller(Note3)	Enable/Disable the onboard LAN devices. Options available: Disabled, Enabled. Default setting is **Enabled**.
Onboard LAN# I/O ROM(Note3)	Enable/Disable the onboard LAN devices, and initializes device expansion ROM. Options available: Disabled, Enabled. Default setting is **Enabled**.
PCI Devices Common Settings	
Above 4G Decoding	Enable/Disable memory mapped I/O to 4GB or greater address space (Above 4G Decoding). Options available: Disabled, Enabled. Default setting is **Enabled**.
SR-IOV Support	If the system has SR-IOV capable PCIe devices, this item Enable/Disable Single Root IO Virtualization Support. Options available: Disabled, Enabled. Default setting is **Enabled**.
Relaxed Ordering	Enable/Disable PCI express device relaxed ordering. Options available: Disabled, Enabled. Default setting is **Enabled**.

(Note1) This section is dependent on the available PCIe Slot.
(Note2) This section is dependent on the available OCP connector.
(Note3) This section is dependent on the available LAN controller.

5-2-9 USB Configuration

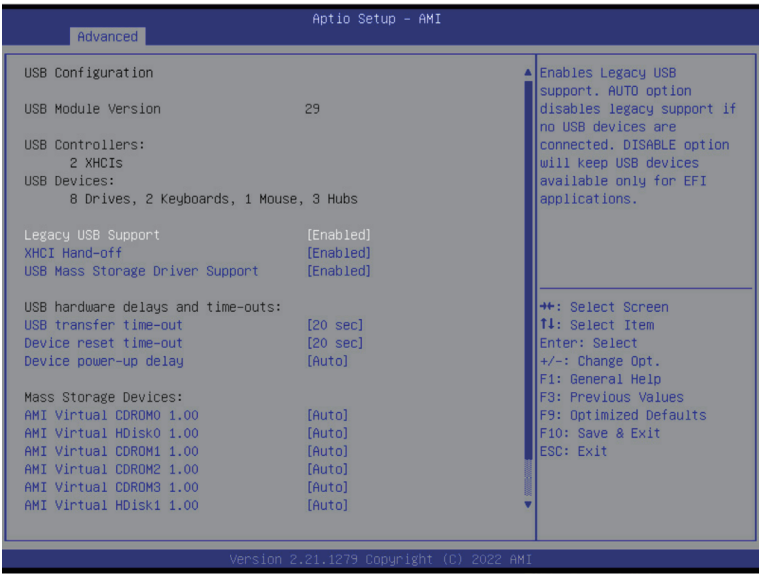

Parameter	Description
USB Configuration	
USB Module Version	Displays the USB module version information.
USB Controllers	Displays the supported USB controllers.
USB Devices:	Displays the USB devices connected to the system.
Legacy USB Support	Enable/Disable the Legacy USB support function. AUTO option disables legacy support if no USB devices are connected. DISABLE option will keep USB devices available only for EFI applications. Options available: Enabled, Disabled, Auto. Default setting is **Enabled**.
XHCI Hand-off	Enable/Disable the XHCI Hand-off support. Options available: Enabled, Disabled. Default setting is **Enabled**.
USB Mass Storage Driver Support(Note)	Enable/Disable the USB Mass Storage Driver Support. Options available: Disabled, Enabled. Default setting is **Enabled**.
USB hardware delays and time-outs	
USB transfer time-out	Selects the time-out value for USB Control/Bulk/Interrupt transfers. Options available: 1 sec, 5 sec, 10 sec, 20 sec. Default setting is **20 sec**.

(Note) This item is present only if you attach USB devices.

Parameter	Description
Device reset time-out	Selects the time-out value during a USB mass storage device reset. Options available: 10 sec, 20 sec, 30 sec, 40 sec. Default setting is **20 sec**.
Device power-up delay	Maximum time the device will take before it properly reports itself to the Host Controller. "Auto" uses default value: for a Root port it is 100 ms, for a Hub port the delay is taken from Hub descriptor. Options available: Auto, Manual. Default setting is **Auto**.
Mass Storage Devices	Displays the mass storage devices available on the system.

5-2-10 Network Stack Configuration

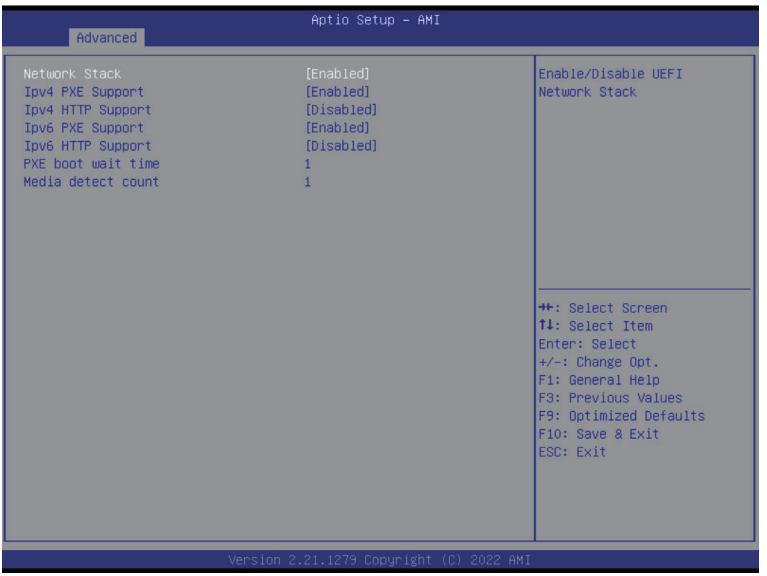

Parameter	Description
Network Stack	Enable/Disable the UEFI network stack. Options available: Enabled, Disabled. Default setting is **Enabled**.
Ipv4 PXE Support(Note)	Enable/Disable the Ipv4 PXE feature. Options available: Enabled, Disabled. Default setting is **Enabled**.
Ipv4 HTTP Support(Note)	Enable/Disable the Ipv4 HTTP feature. Options available: Enabled, Disabled. Default setting is **Disabled**.
Ipv6 PXE Support(Note)	Enable/Disable the Ipv6 PXE feature. Options available: Enabled, Disabled. Default setting is **Enabled**.
Ipv6 HTTP Support(Note)	Enable/Disable the Ipv6 HTTP feature. Options available: Enabled, Disabled. Default setting is **Disabled**.
PXE boot wait time(Note)	Wait time in seconds to press ESC key to abort the PXE boot. Press the <+> / <-> keys to increase or decrease the desired values.
Media detect count(Note)	Number of times the presence of media will be checked. Press the <+> / <-> keys to increase or decrease the desired values.

(Note) This item appears when **Network Stack** is set to **Enabled**.

5-2-11 NVMe Configuration

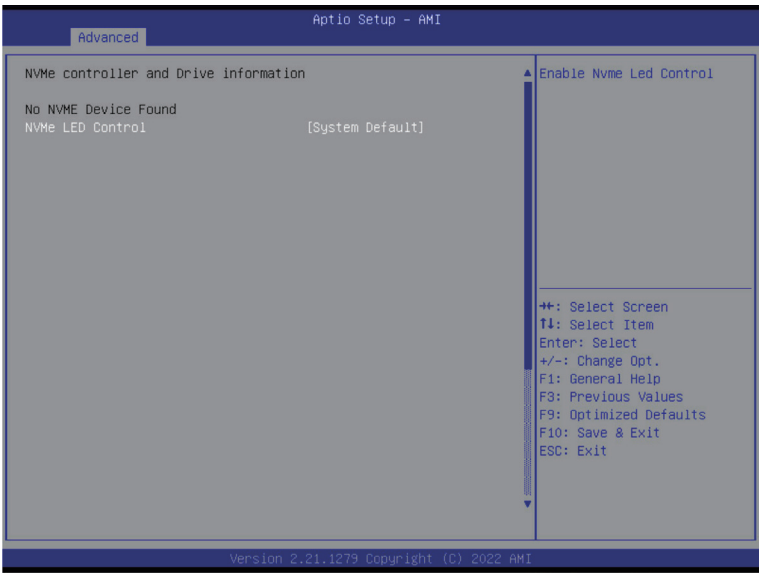

Parameter	Description
NVMe Configuration	Displays the NVMe devices connected to the system.
NVMe LED Control	Enable/Disable NVMe LED Control. Options available: System Default, Disabled, Enabled. Default setting is **Enabled**.

5-2-12 SATA Configuration

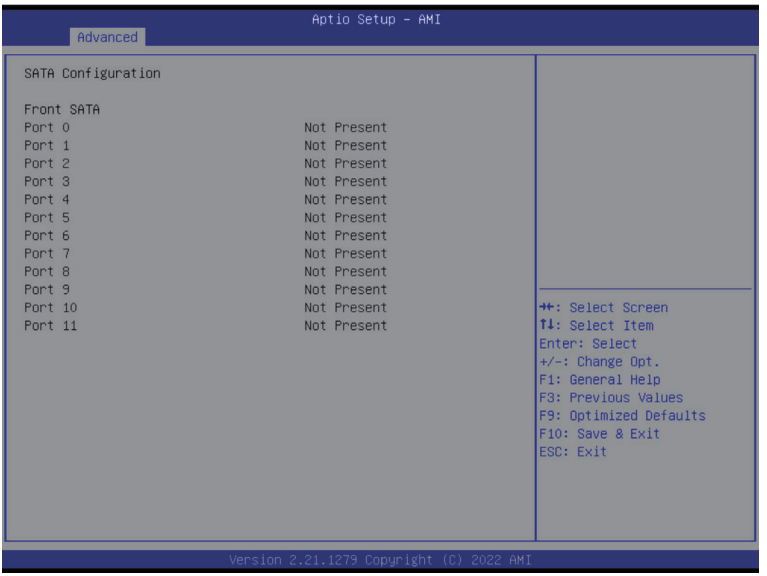

Parameter	Description
SATA Configuration	Displays the installed HDD devices information. System will automatically detect HDD type.

5-2-13 Graphic Output Configuration

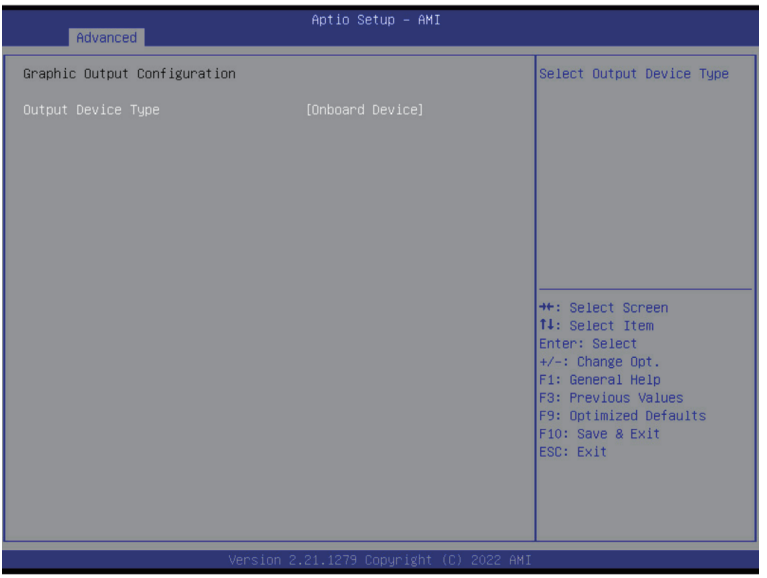

Parameter	Description
Output Device Type	Selects output device type. Options available: First loaded Device, Onboard Device, External Device, Specific Device. Default setting is **Onboard Device**.

5-2-14 AMD Mem Configuration Status

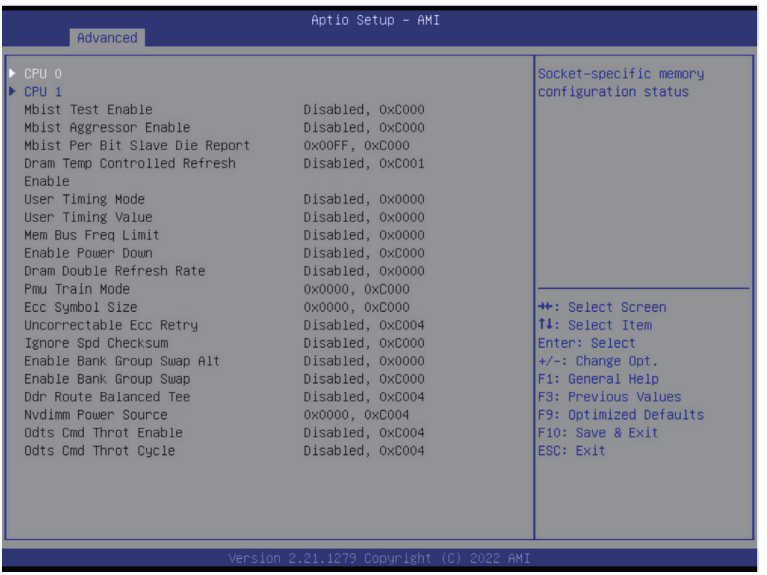

Parameter	Description
CPU 0/1	Press [Enter] to view the memory configuration status related to CPU 0/1.

5-2-15 Tls Auth Configuration

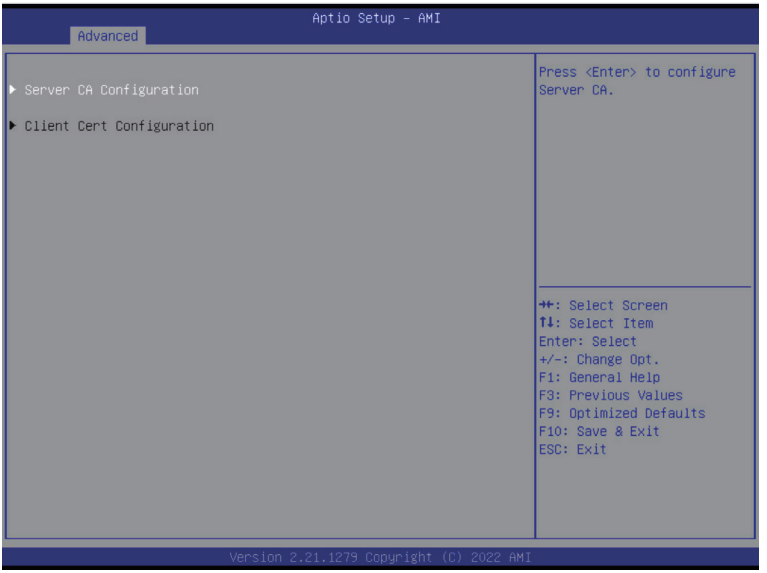

Parameter	Description
Server CA Configuration	Press [Enter] for configuration of advanced items. ◆ Enroll Cert – Press [Enter] to enroll a certificate • Enroll Cert Using File • Cert GUID Input digit character in 1111111-2222-3333-4444-1234567890ab format. – Commit Changes and Exit – Discard Changes and Exit ◆ Delete Cert
Client Cert Configuration	Press [Enter] for configuration of advanced items.

5-2-16 RAM Disk Configuration



Parameter	Description
Disk Memory Type	Specifies the type of memory to use from available memory pool in system to create a disk. Options available: Boot Service Data, Reserved. Default setting is **Boot Service Data**.
Create Raw	Creates a raw RAM disk. ◆ Size (Hex) – Input a valid RAM disk size that should be multiple of the RAM disk block size. ◆ Create & Exit ◆ Discard & Exit
Create from file	Creates a RAM disk from a given file.
Created RAM disk list	
Remove selected RAM disk(s)	Selects the RAM disk(s) to remove.

5-2-17 iSCSI Configuration

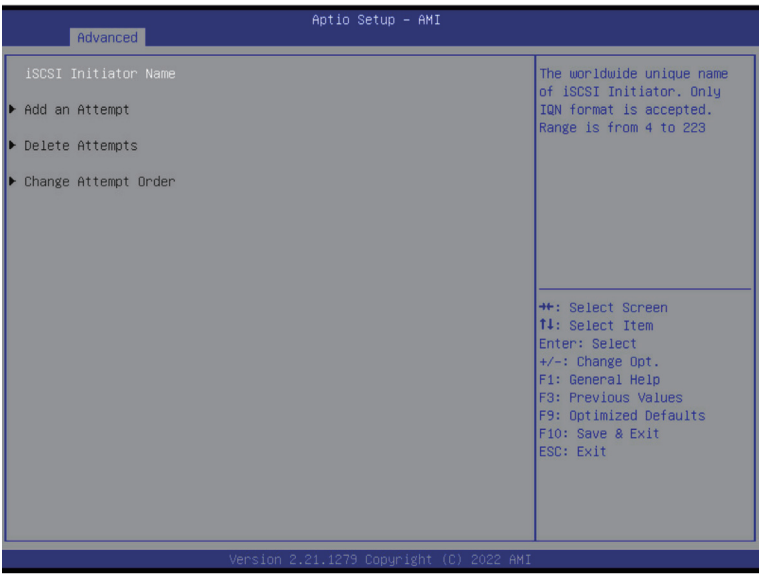

Parameter	Description
iSCSI Initiator Name	Press [Enter] and name iSCSI Initiator. Only IQN format is accepted. Range: from 4 to 223
Add an Attempt	Press [Enter] to configure advanced items.
Delete Attempts	Press [Enter] to configure advanced items.
Change Attempt Order	Press [Enter] to configure advanced items.

5-2-18 Intel(R) I350 Gigabit Network Connection



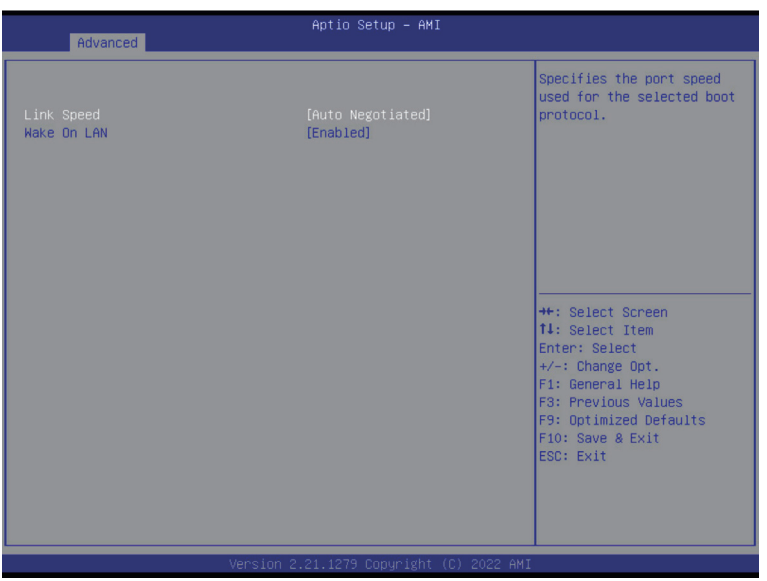

Parameter	Description
NIC Configuration	Press [Enter] to configure advanced items. ◆ Link Speed – Allows for automatic link speed adjustment. – Options available: Auto Negotiated, 10 Mbps Half, 10 Mbps Full, 100 Mbps Half, 100 Mbps Full. Default setting is **Auto Negotiated**. ◆ Wake On LAN – Enables power on of the system via LAN. Note that configuring Wake on LAN in the operating system does not change the value of this setting, but does override the behavior of Wake on LAN in OS controlled power states. – Options available: Disabled, Enabled. Default setting is **Enabled**.
Blink LEDs	Identifies the physical network port by blinking the associated LED. Press the numeric keys to adjust desired values.
UEFI Driver	Displays the technical specifications for the Network Interface Controller.
Adapter PBA	Displays the technical specifications for the Network Interface Controller.
Device Name	Displays the technical specifications for the Network Interface Controller.
Chip Type	Displays the technical specifications for the Network Interface Controller.
PCI Device ID	Displays the technical specifications for the Network Interface Controller.
PCI Address	Displays the technical specifications for the Network Interface Controller.
Link Status	Displays the technical specifications for the Network Interface Controller.
MAC Address	Displays the technical specifications for the Network Interface Controller.
Virtual MAC Address	Displays the technical specifications for the Network Interface Controller.

5-2-19 VLAN Configuration

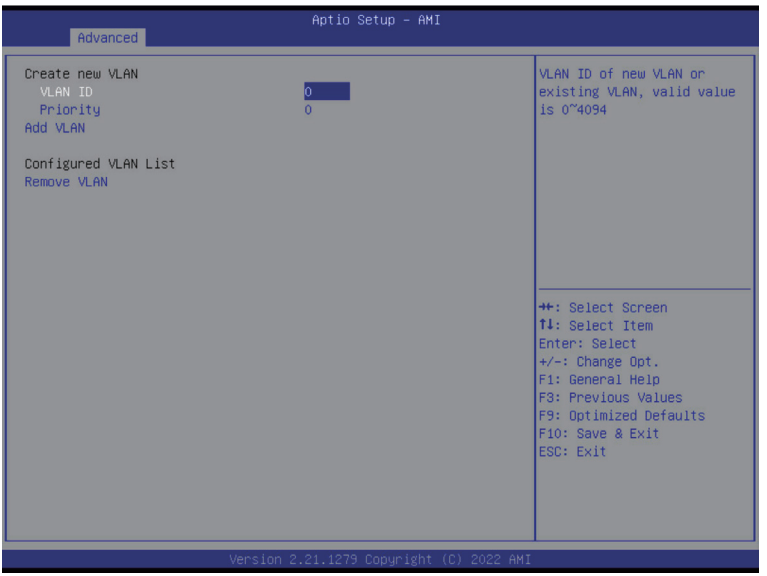

Parameter	Description
Enter Configuration Menu	Press [Enter] to configure advanced items. ◆ Create new VLAN ◆ VLAN ID – Sets VLAN ID for a new VLAN or an existing VLAN. – Press the <+> / <-> keys to increase or decrease the desired values. – The valid range is from 0 to 4094. ◆ Priority – Sets 802.1Q Priority for a new VLAN or an existing VLAN. – Press the <+> / <-> keys to increase or decrease the desired values. – The valid range is from 0 to 7. ◆ Add VLAN – Press [Enter] to create a new VLAN or update an existing VLAN. ◆ Configured VLAN List ◆ Remove VLAN – Press [Enter] to remove an existing VLAN.

5-2-20 MAC IPv4 Network Configuration

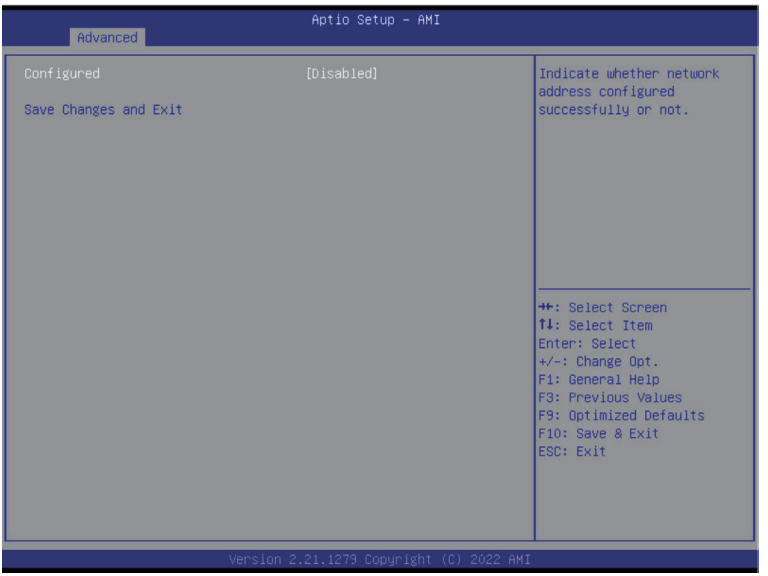

Parameter	Description
Configured	Indicates whether network address is configured successfully or not. Options available: Enabled, Disabled. Default setting is **Disabled.**
Enable DHCP(Note)	Options available: Enabled, Disabled. Default setting is **Disabled.**
Local IP Address(Note)	Press [Enter] to configure local IP address.
Local NetMask(Note)	Press [Enter] to configure local NetMask.
Local Gateway(Note)	Press [Enter] to configure local Gateway
Local DNS Servers(Note)	Press [Enter] to configure local DNS servers
Save Changes and Exit	Press [Enter] to save all configurations.

(Note) This item appears when **Configured** is set to **Enabled**.

5-2-21 MAC IPv6 Network Configuration

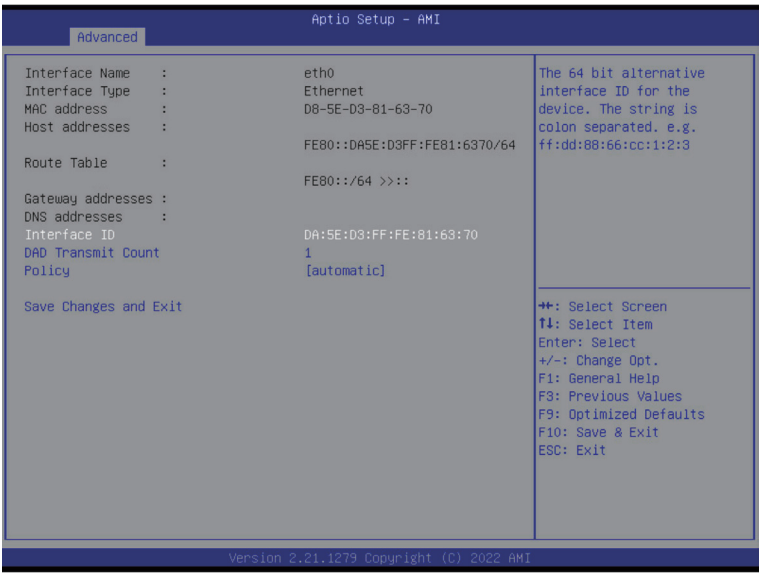

Parameter	Description
Enter Configuration Menu	Press [Enter] to configure advanced items. ◆ Displays the MAC Address information. ◆ Interface ID – The 64 bit alternative interface ID for the device. The string is colon separated. e.g. ff:dd:88:66:cc:1:2:3. ◆ DAD Transmit Count – The number of consecutive Neighbor solicitation messages sent while performing Duplicate Address Detection on a tentative address. A value of zero indicates that Duplicate Address Detection is not performed. ◆ Policy – Options available: automatic, manual. Default setting is **automatic**. ◆ Save Changes and Exit – Press [Enter] to save all configurations.

5-3 AMD CBS Menu

AMD CBS menu displays submenu options for configuring the CPU-related information that the BIOS automatically sets. Select a submenu item, then press [Enter] to access the related submenu screen.

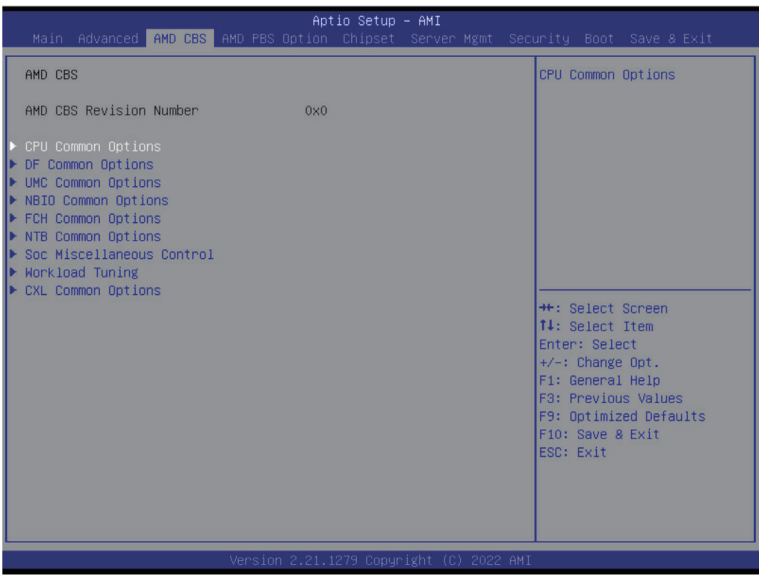

5-3-1 CPU Common Options

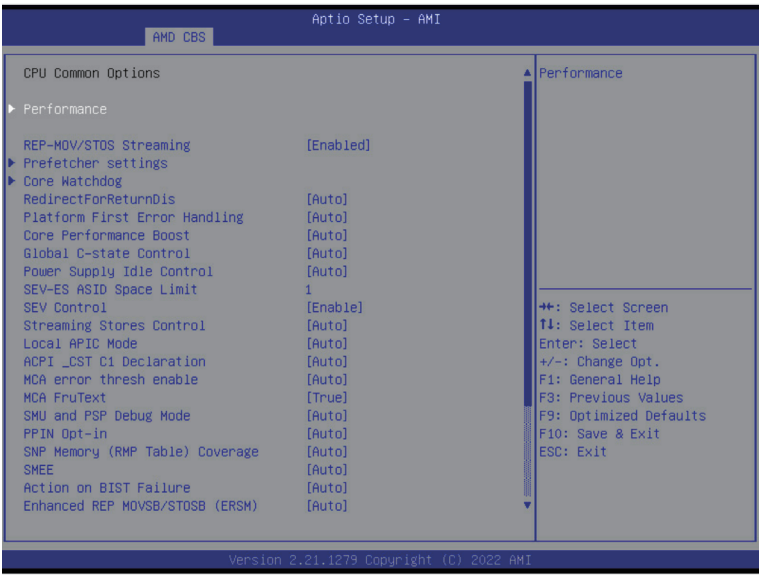

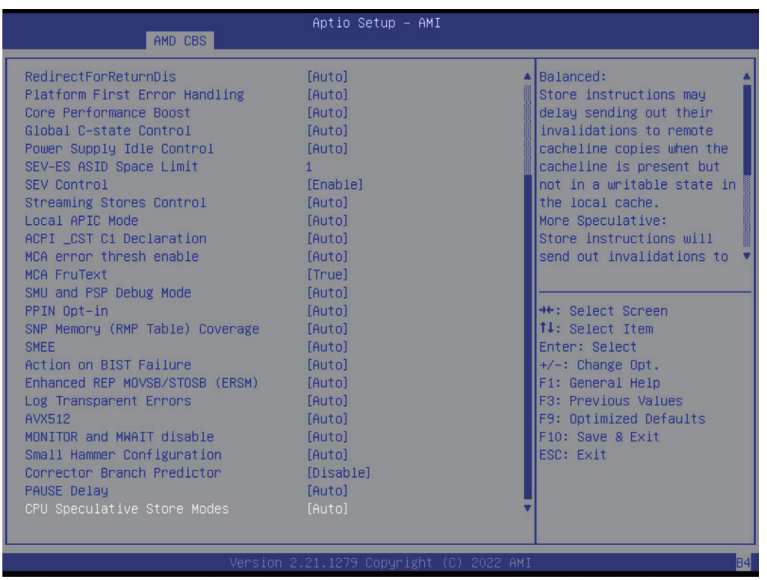

Parameter	Description
CPU Common Options	
Performance	Press [Enter] for configuration of advanced items.
REP-MOV/STOS Streaming	Allow REP-MOV/STOS to use non-caching streaming stores for large sizes. Options available: Disabled, Enabled. Default setting is **Enabled**.
Prefetcher settings	Press [Enter] for configuration of advanced items.
Core Watchdog	Press [Enter] for configuration of advanced items.
RedirectForReturnDis	From a workaround for GCC/C000005 issue for XV Core on CZ A0, setting MSRC001_1029 Decode Configuration (DE_CFG) bit 14 [DecfgNoRdrctForReturns] to 1. Options available: Auto, 1, 0. Default setting is **Auto**.
Platform First Error Handling	Enable/Disable PFEH, cloak individual banks, and mask deferred error interrupts from each bank. Options available: Enabled, Disabled, Auto. Default setting is **Auto**.
Core Performance Boost	Enable/Disable the Core Performance Boost function. Options available: Disabled, Auto. Default setting is **Auto**.
Global C-state Control	Controls the IO based C-state generation and DF C-states. Options available: Disabled, Enabled, Auto. Default setting is **Auto**.
Power Supply Idle Control	Configures the Power Supply Idle Control. Options available: Low Current Idle, Typical Current Idle, Auto. Default setting is **Auto**.
SEV-ES ASID Space Limit	Configures the Space limit for SEV-ES ASIDs. Default setting is **1**.
SEV Control	Enable/Disable SEV control. Options available: Enable, Disable. Default setting is **Enable**.
Streaming Stores Control	Enable/Disable the Streaming Stores functionality. Options available: Disabled, Enabled, Auto. Default setting is **Auto**.
Local APIC Mode	Sets the Local APIC Mode. Options available: Compatibility, xAPIC, x2APIC, Auto. Default setting is **Auto**.
ACPI_CST C1 Declaration	Determines whether or not to declare the C1 state to the OS.. Options available: Disabled, Enabled, Auto. Default setting is **Auto**.
MCA error thresh enable	Enable MCA error thresholding. Options available: False, True, Auto. Default setting is **True**.
MCA FruText	Enable MCA FruText. Options available: False, True. Default setting is **Auto**.
SMU and PSP Debug Mode	When this option is enabled, specific uncorrected errors detected by the PSP FW or SMU FW will hand and not reset the system. Options available: Disabled, Enabled, Auto. Default setting is **Auto**.
PPIN Opt-in	Enable/Disable the PPIN feature. Options available: Disabled, Enabled, Auto. Default setting is **Auto**.
SNP Memory (RMP Table) Coverage	Enabled: Enter system memory is covered. Options available: Disabled, Enabled, Custom, Auto. Default setting is **Auto**.

Parameter	Description
SMEE	Controls the Secure Memory Encryption Enable (SMEE) function. Options available: Disable, Enable, Auto. Default setting is **Auto**.
Action on BIST Failure	Action to take when a CCD BIST failure is detected. Options available: Do nothing, Down-CCD, Auto. Default setting is **Auto**.
Enhanced REP MOVSB/ STOSB (ERMSB)	Options available: Disabled, Enabled, Auto. Default setting is **Auto**.
Log Transparent Errors	Enable/Disable the log Transparent errors function. Options available: Auto, Disabled, Enabled. Default setting is **Auto**.
AVX512	Enable/Disable AVX512. Options available: Disabled, Enabled, Auto. Default setting is **Auto**.
MONITOR and MWAIT disable	The MONITOR, MWAIT, MONITORX and MWAITX opcodes become invalid when enabled. Options available: Enabled, Disabled, Auto. Default setting is **Auto**
Small Hammer Configuration	Options available: Disabled, Enabled, Auto. Default setting is **Auto**.
Corrector Branch Predictor	Options available: Disable, Enable. Default setting is **Disable**.
PAUSE Delay	Number a cycles thread will be idle after a PAUSE instruction. Options available: Auto, Disable, 16 cycles, 32 cycles, 64 cycles, 128 cycles. Default setting is **Auto**.
CPU Speculative Store Modes	Select the CPU speculative store modes. Options available: Balanced, More Speculative, Less Speculative, Auto. Default setting is **Auto**.

5-3-1-1 Performance

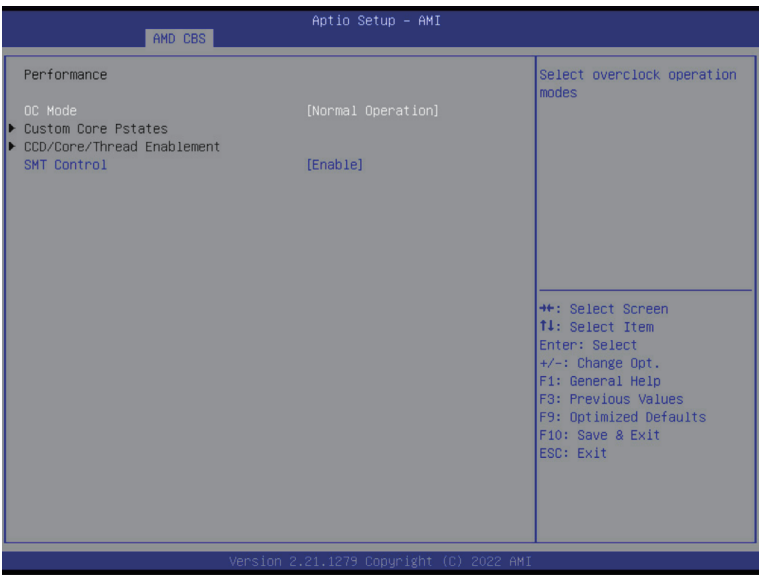

Parameter	Description
Performance	
OC Mode(Note)	Options available: Normal Operation, Customized. Default setting is **Normal Operation**.
Custom Core Pstates	Allows you to accept or decline enabling Custom Core Pstates. When accepted, you can disable or customize core pstates.
CCD/Core/Thread Enablement	Allows you to accept or decline enabling CCDs, processor cores and threads. When accepted, you can control the number of CCDs to be used, and the number of cores to be used. ◆ CCD Control – Options available: Auto, 2 CCDs, 4 CCDs, 6 CCDs, 8 CCDs, 10 CCDs. Default setting is **Auto**. ◆ Core Control – Options available: Auto, ONE(1+0), TWO(2+0), THREE(3+0), FOUR(4+0), FIVE(5+0), SIX(6+0), SEVEN(7+0). – Default setting is **Auto**.
SMT Control	Can be used to disable symmetric multithreading. To re-enable SMT, a POWER CYCLE is needed after select the 'Enable' option. Select 'Auto' base on BIOS PCD. (PcdAmdSmtMode) default setting. Options available: Disable, Enable, Auto. Default setting is **Enable**.

(Note) Advanced items are configurable when this item is defined.

5-3-1-2 Prefetcher Settings

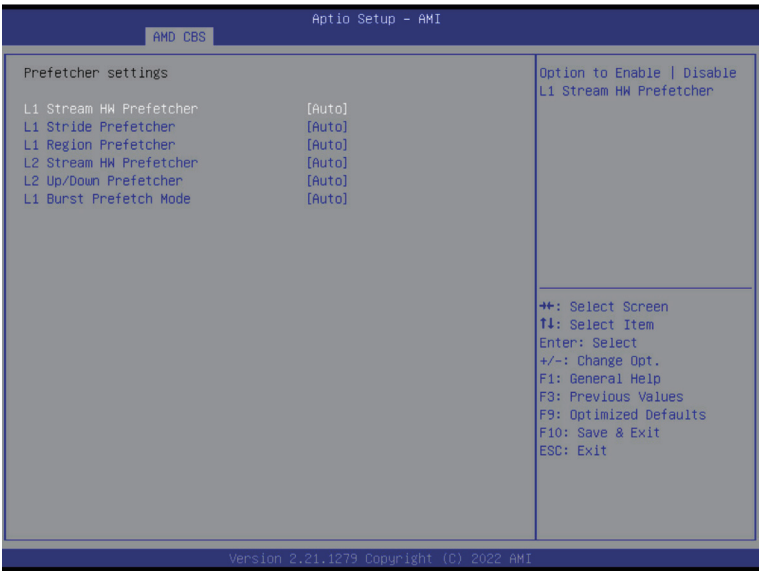

Parameter	Description
Prefetcher settings	
L1 Stream HW Prefetcher	Enable/Disable L1 Stream HW Prefetcher. Options available: Disable, Enable, Auto. Default setting is **Auto**.
L1 Stride Prefetcher	Use memory access history of individual instructions to fetch additional lines when each access is a constant distance from the previous. Enable/Disable L1 Stride Prefetcher. Options available: Disable, Enable, Auto. Default setting is **Auto**.
L1 Region Prefetcher	Use memory access history to fetch additional lines when the data access for a given instruction tends to be followed by other data accesses. Enable/Disable L1 Region Prefetcher. Options available: Disable, Enable, Auto. Default setting is **Auto**.
L2 Stream HW Prefetcher	Enable/Disable L2 Stream HW Prefetcher. Options available: Disable, Enable, Auto. Default setting is **Auto**.
L2 Up/Down Prefetcher	Use memory access history to determine whether to fetch the next or previous line for all memory accesses. Enable/Disable L2 Up/Down Prefetcher. Options available:Disable, Enable, Auto. Default setting is **Auto**.
L1 Burst Prefetch Mode	Enable/Disable L1 Burst Prefetch Mode. Options available: Disable, Enable, Auto. Default setting is **Auto**.

5-3-1-3 Core Watchdog



Parameter	Description
Core Watchdog	
Core Watchdog Timer Enable(Note)	Enable/Disable CPU Watchdog Timer. Options available: Disabled, Enabled, Auto. Default setting is **Auto**.
Core Watchdog Timer Interval	Select the CPU Watchdog Timer interval. Options available: 2.681s, 1.340s, 669.41ms, 334.05ms, 166.37ms, 82.53ms, 40.61ms, 20.970ms, 10.484ms,5.241ms, 2.620ms, 1.309ms, 654.08us, 326.4us, 162.56us, 80.64us, 39.68us, Auto. Default setting is **Auto**.

(Note) Advanced items prompt when this item is defined.

5-3-2 DF Common Options

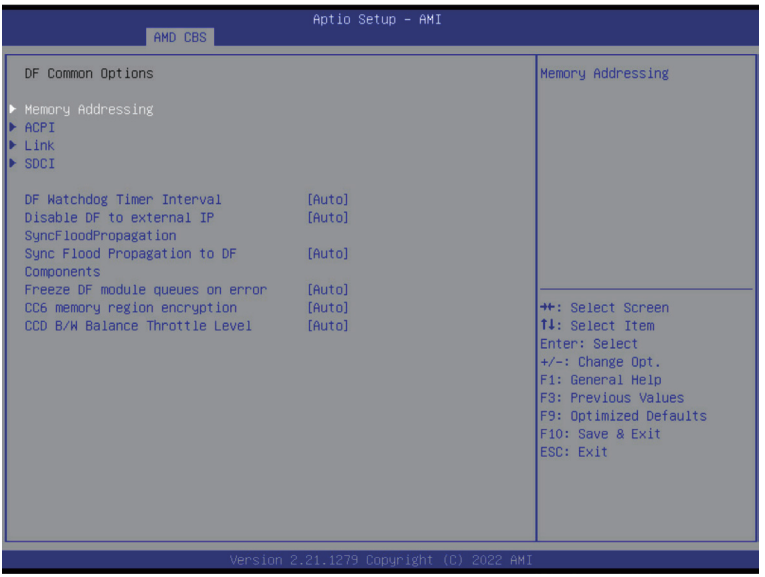

Parameter	Description
DF Common Options	
Memory Addressing	Press [Enter] for configuration of advanced items.
ACPI	Press [Enter] for configuration of advanced items.
Link	Press [Enter] for configuration of advanced items.
SDCI	Press [Enter] for configuration of advanced items.
DF Watchdog Timer Interval	Configures the Data Fabric watchdog timer interval. Options available: Auto, 41ms, 166ms, 334ms, 669ms, 1.34 seconds, 2.68 seconds, 5.36 seconds. Default setting is **Auto**.
Disable DF to external IP sync flood propagation	Enable/Disable SyncFlood to UMC & downstream slaves. Options available: Sync flood disabled, Sync flood enabled, Auto. Default setting is **Auto**.
Sync flood propagation to DF Components	Enable/Disable DF Sync Flood propagation. Options available: Sync flood disabled, Sync flood enabled, Auto. Default setting is **Auto**.
Freeze DF module queues on error	Options available: Disabled, Enabled, Auto. Default setting is **Auto**.
CC6 memory region encryption	Controls whether or not the CC6 save/restor memory is encrypted. Options available: Disabled, Enabled, Auto. Default setting is **Auto**.
CCD B/W Balance Throttle Level	Options available: Auto, Level 0, Level 1, Level 2, Level 3, Level 4. Default setting is **Auto**.

5-3-2-1 Memory Addressing

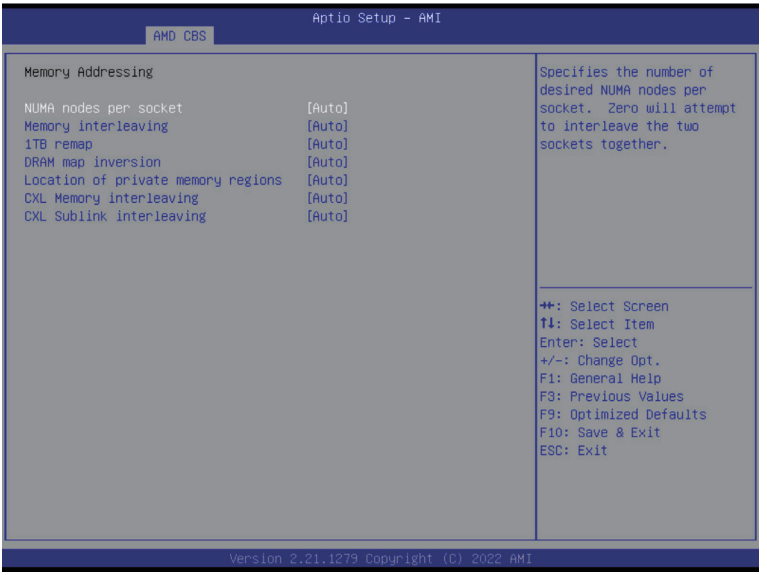

Parameter	Description
Memory Addressing	
NUMA nodes per socket	Specifies the number of desired NUMA nodes per socket. Options available: NPS0,NPS1,NPS2,NPS4, Auto. Default setting is **Auto**. NOTE! • **Available options may vary by system configuration.** • **Only dual processor configuration supports NPS0.**
Memory interleaving	Enable/Disable the Memory interleaving feature. Options available: Disabled, Auto, Enabled. Default setting is **Auto**.
1TB remap	Enable/Disable to remap DRAM out of the space just below the 1TB boundary. The ability to remap depends on DRAM configuration, NPS, and interleaving selection, and may not always be possible. Options available: Do not remap, Attempt to remap, Auto. Default setting is **Auto**.
DRAM map inversion	Enable/Disable the DRAM map inversion function. Options available: Disabled, Enabled, Auto. Default setting is **Auto**.
Location of private memory regions	Controls whether or not the private memory regions (PSP, SMU and CC6) are at the top of DRAM or distributed. Options available: Distributed, Consolidated, Auto. Default setting is **Auto**.
CXL Memory interleaving	Options available: Disabled, Enabled, Auto. Default setting is **Auto**.
CXL Sublink interleaving	Options available: Enable, Disable, Auto. Default setting is **Auto**.

5-3-2-2 ACPI

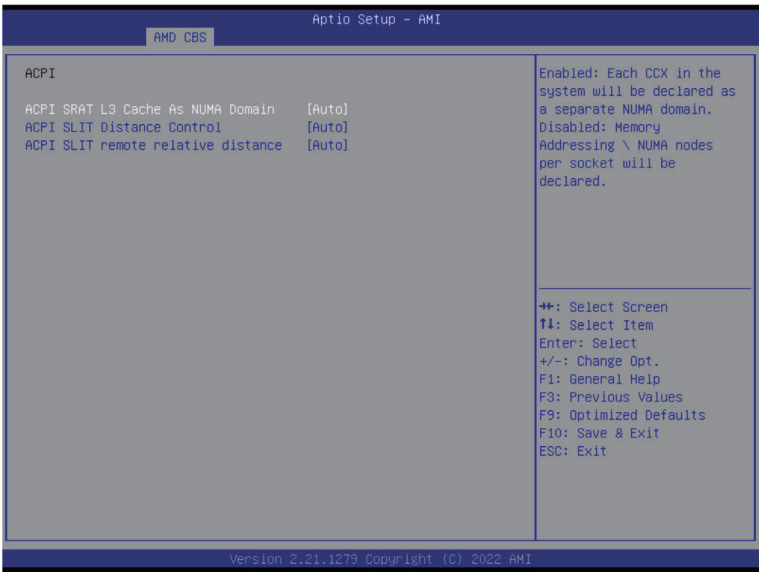

Parameter	Description
ACPI	
ACPI SRAT L3 Cache As NUMA Domain	Enable/Disable report each L3 cache as a NUMA Domain to the OS. Options available: Disabled, Enabled, Auto. Default setting is **Auto**.
ACPI SLIT Distance Control	Determines how the SLIT distances are declared. Options available: Manual, Auto. Default setting is **Auto**.
ACPI SLIT remote relative distance	Sets the remote socket distance for 2P systems as near (2.8) or far (3.2). Options available: Near, Far, Auto. Default setting is **Auto**.

5-3-2-3 Link

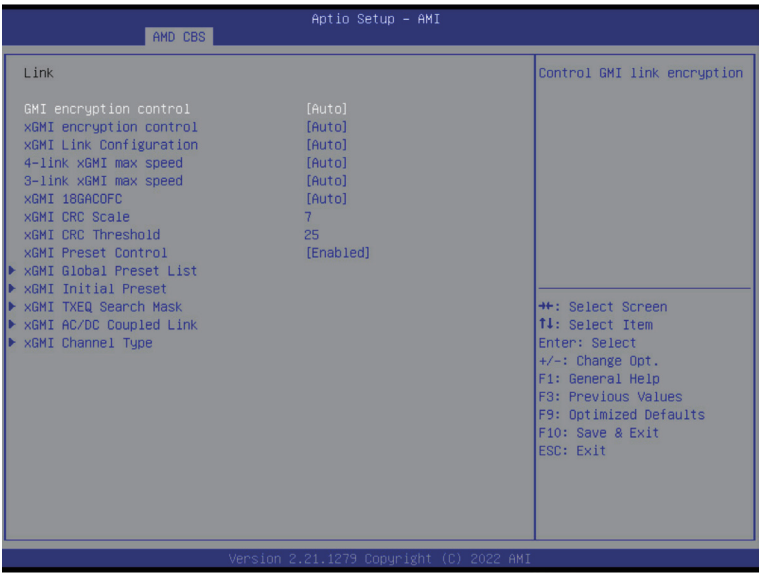

Parameter	Description
GMI encryption control	Enable/Disable GMI link encryption. Options available: Disabled, Enabled, Auto. Default setting is **Auto**.
xGMI encryption control	Enable/Disable xGMI link encryption. Options available: Disabled, Enabled, Auto. Default setting is **Auto**.
xGMI Link Configuration	Configures the number of xGMI2 links used on a multi-socket system. Options available: Auto, 3 xGMI Links, 4 xGMI Links. Default setting is **Auto**.
4-link xGMI max speed	Specifies the max speed of 4-link xGMI. Options available: 12Gbps, 16Gbps, 17Gbps, 18Gbps, 20Gbps, 22Gbps, 23Gbps, 24Gbps, 25Gbps, 26Gbps, 27Gbps, 30Gbps, 32Gbps, Auto. Default setting is **Auto**.
3-link xGMI max speed	Specifies the max speed of 3-link xGMI. Options available: 12Gbps, 16Gbps, 17Gbps, 18Gbps, 20Gbps, 22Gbps, 23Gbps, 24Gbps, 25Gbps, 26Gbps, 27Gbps, 30Gbps, 32Gbps, Auto. Default setting is **Auto**.
xGMI 18GACOFC	Configures xGMI 18GACOFC. Options available: Auto, Enable, Disable. Default setting is **Auto**.
xGMI CRC Scale	Configures leaky bucket scale for xGMI and WAFL CRC errors. Every scale milliseconds an error will leak from the CRC counter. Default setting is **7**.
xGMI CRC Threshold	Configures leaky bucket threshold for xGMI and WAFL CRC errors. If link CRC counter ecxeeds this threshold, an error will be logged. Default setting is **25**.
xGMI Preset Control	Enable/Disable xGMI Preset control. Options available: Disabled, Enabled, Auto. Default setting is **Auto**.

Parameter	Description
xGMI Global Preset List	Press [Enter] to configure the xGMI Preset list.
xGMI Initial Preset	Press [Enter] to configure the xGMI Initial Preset CPU0/1 link.
xGMI TXEQ Search Mask	Press [Enter] to configure the xGMI TXEQ Search Mask CPU0/1 link.
xGMI AC/DC Coupled Link	Press [Enter] to configure the xGMI AC/DC Coupled link. ◆ xGMI AC/DC Coupled Link Control(Note) – Options available: Manual, Auto. Default setting is **Auto**.
xGMI Channel Type	Press [Enter] to configure the xGMI Channel Type. ◆ xGMI Channel Type Control(Note) – Options available: Manual, Auto. Default setting is **Auto**.

(Note) Advanced items prompt when this item is defined.

5-3-2-4 SDCI

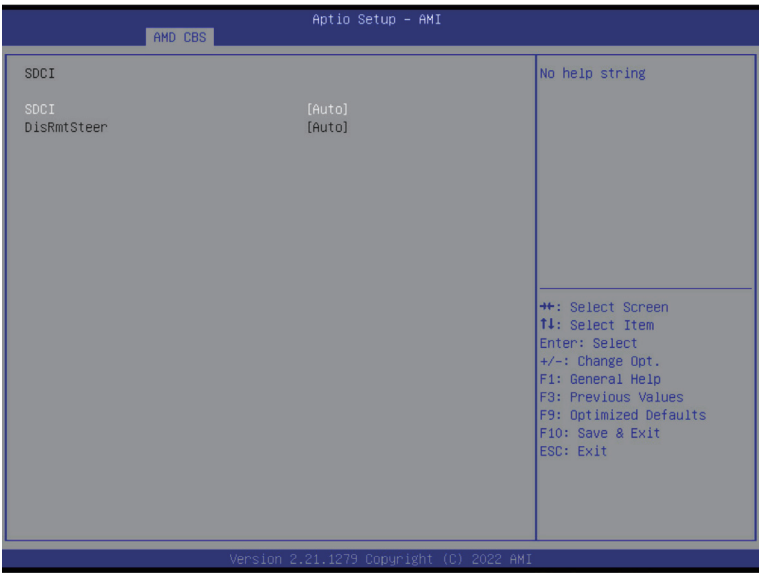

Parameter	Description
SDCI(Note)	Options available: Disabled, Enabled, Auto. Default setting is **Auto**.
DisRmSteer	Options available: Disabled, Enabled, Auto. Default setting is **Auto**.

(Note) Advanced items prompt when this item is defined.

5-3-3 UMC Common Options

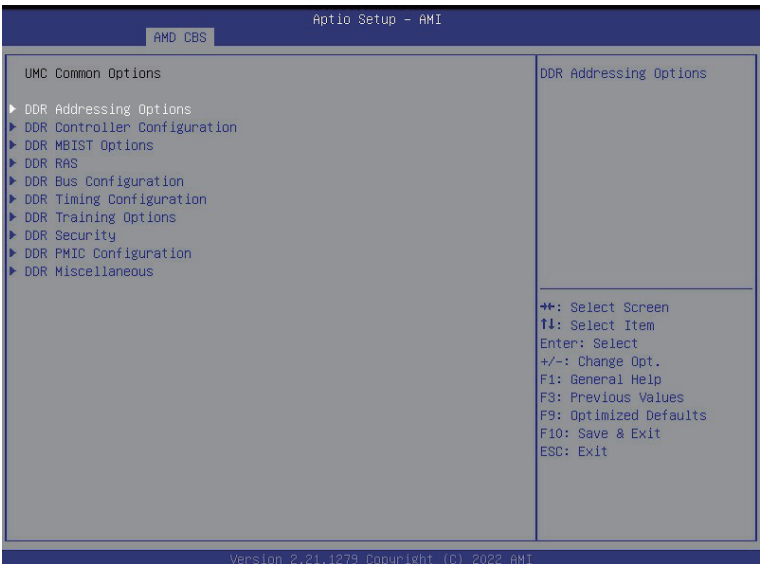

Parameter	Description
UMC Common Options	
DDR4 Addressing Options	Press [Enter] for configuration of advanced items.
DDR Controller Configuration	Press [Enter] for configuration of advanced items.
DDR MBIST Options	Press [Enter] for configuration of advanced items.
DDR RAS	Press [Enter] for configuration of advanced items.
DDR Bus Configuration	Press [Enter] for configuration of advanced items.
DDR Timing Configuration	Press [Enter] for configuration of advanced items.
DDR Training Options	Press [Enter] for configuration of advanced items.
DDR Security	Press [Enter] for configuration of advanced items.
DDR PMIC Configuration	Press [Enter] for configuration of advanced items.
DDR Miscellaneous	Press [Enter] for configuration of advanced items.

5-3-3-1 DDR Addressing Options

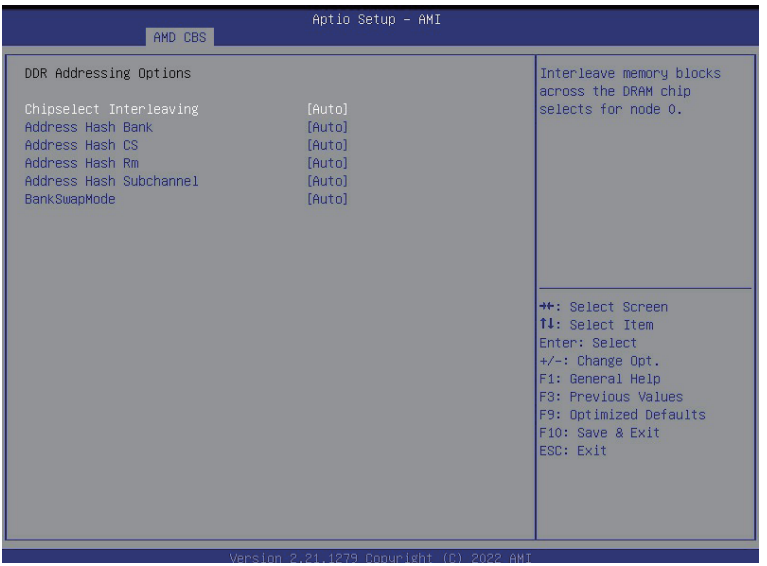

Parameter	Description
DDR Addressing Options	
Chipselect Interleaving	Interleaves memory blocks across the DRAM chip selects for node 0. Options available: Disabled, Auto. Default setting is **Auto**.
Address Hash Bank	Enable or disable bank addressing hashing. Options available: Enabled, Disabled, Auto. Default setting is **Auto**.
Address Hash CS	Enable or disable CS addressing hashing. Options available: Enabled, Disabled, Auto. Default setting is **Auto**.
Address Hash Rm	Enable or disable RM addressing hashing. Options available: Enabled, Disabled, Auto. Default setting is **Auto**.
Address Hash Subchannel	Enable or disable sub-channel addressing hashing. Options available: Enabled, Disabled, Auto. Default setting is **Auto**.
Bank SwapMode	Options available: Auto, Disabled, Swap CPU. Default setting is **Auto**.

5-3-3-2 DDR Controller Configuration

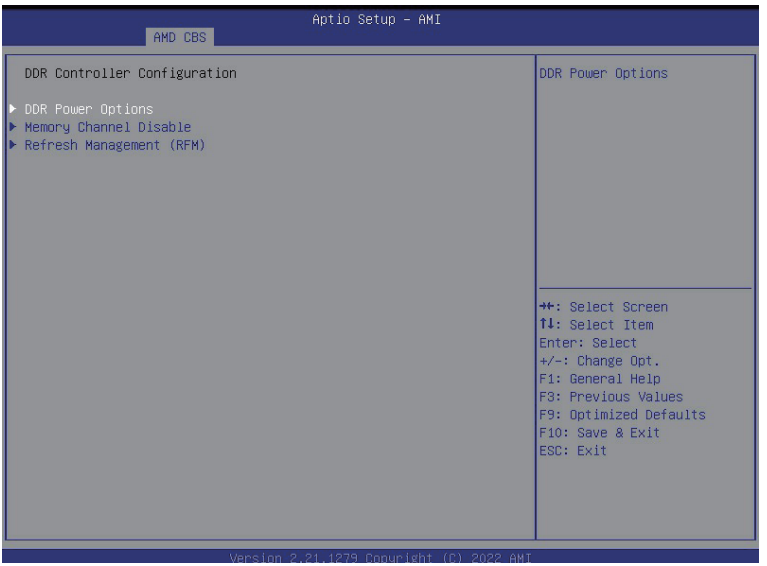

Parameter	Description
DDR Cotroller Configuration	
DDR Power Options	Press [Enter] for configuration of advanced items.
Memory Channel Disable	Press [Enter] for configuration of advanced items.
Refresh Management (RFM)	Press [Enter] for configuration of advanced items.

5-3-3-2-1 DDR Power Options

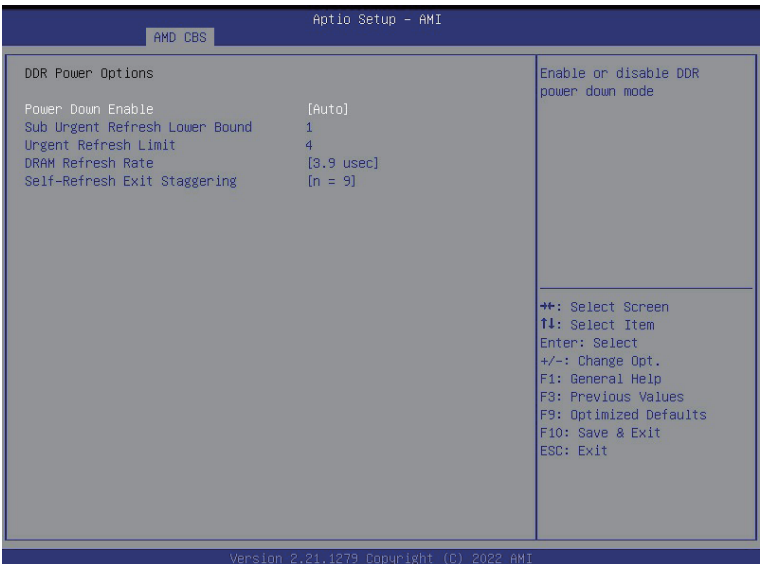

Parameter	Description
DDR Power Options	
Power Down Enable	Enable or disable DDR power down mode. Options available: Disabled, Enabled, Auto. Default setting is **Auto**.
Sub Urgent Refresh Lower Bound	Specifies the stored refresh limit required to enter sub-urgent refresh mode.
Urgent Refresh Limit	Specifies the stored refresh limit required to enter urgent refresh mode.
DRAM Refresh Rate	DRAM refresh rate: 1.95us or 3.9us. Options available: 3.9 usec, 1.95usec. Default setting is **3.9 usec**.
Self-Refresh Exit Staggering	Options available: Disabled, n=1~9. Default setting is **n=9**.

5-3-3-2-2 Memory Channel Disable

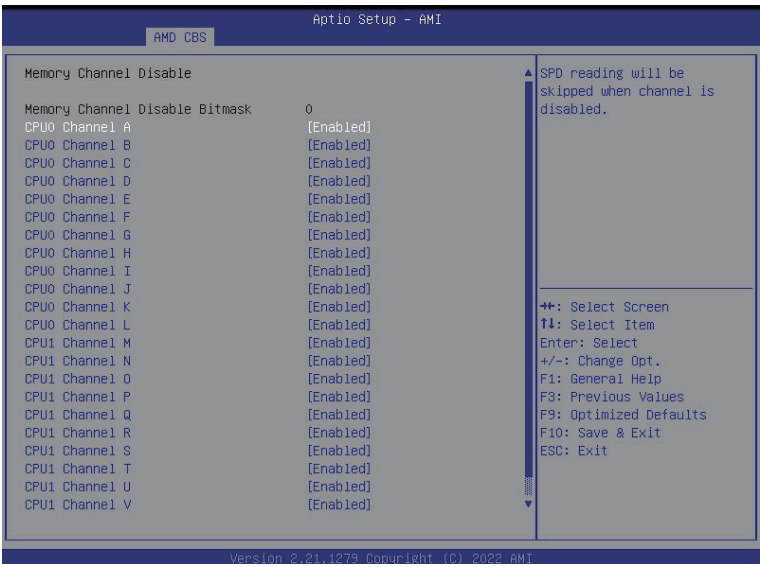

Parameter	Description
Memory Channel Disable	
Memory Channel Disable Bitmask	
CPU0/CPU1 Channel_#	Press [Enter] to enable/disable specific memory channel.

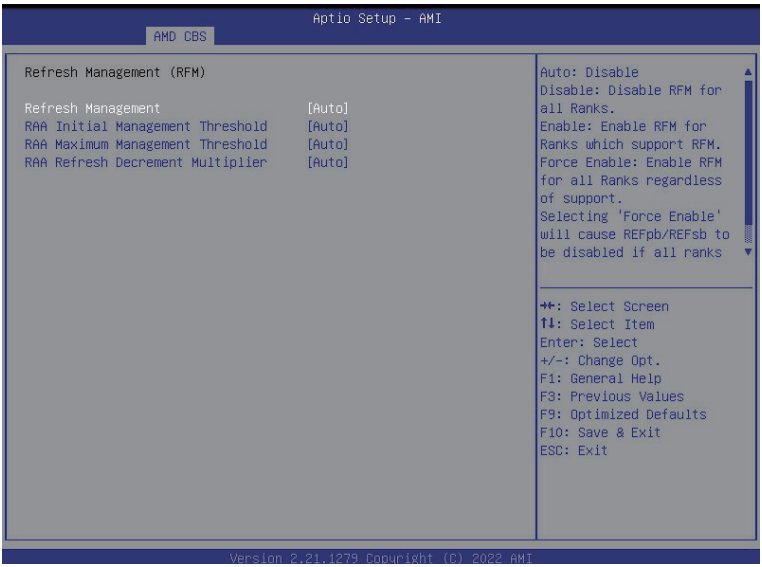

Parameter	Description
Refresh Management (RFM)	
Refresh Management	Configure Refresh Management. Options available: Enable, Disable, Auto, Force Enable. Default setting is **Auto**.
RAA Initial Management Threshold	Override Rolling Accumulated ACT Initial Management Threshold. Options available: 32, 40, 48, 56, 64, 72, 80, Auto. Default setting is **Auto**.
RAA Maximum Management Threshold	Override Rolling Accumulated ACT Maximum Management Threshold. Options available: 3X, 4X, 5X, 6X, Auto. Default setting is **Auto**.
RAA Refresh Decrement Multiplier	Override RAA Refresh Decrement Multiplier. Options available: 0.5, 1, Auto. Default setting is **Auto**.

5-3-3-3 DDR MBIST Options

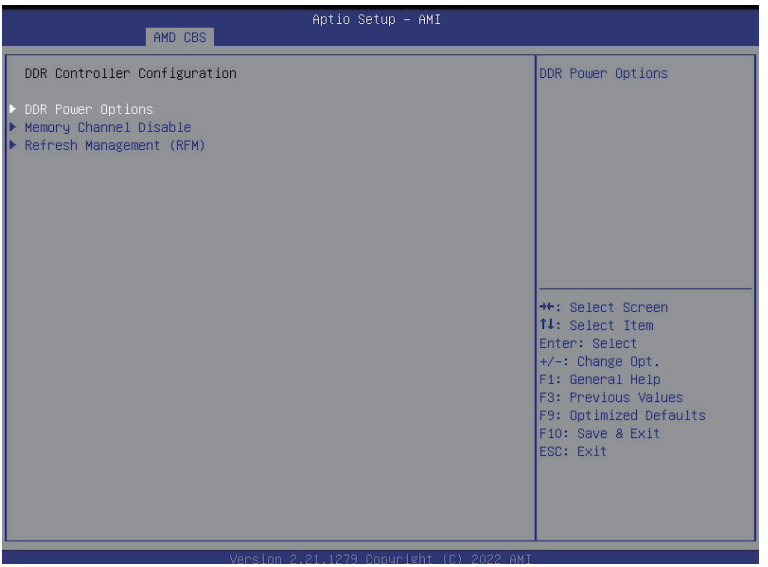

Parameter	Description
DDR MBIST Options	
MBIST Enable	Enable/Disable the Memory MBIST function. Options available: Enabled/Disabled. Default setting is **Disabled**.
MBIST Test Mode(Note1)	Selects MBIST Test Mode. **Interface Mode**: Tests Single and Multiple CS transactions and Basic Connectivity. **Data Eye Mode**: Measures Voltage vs. Timing. Options available: Auto, Both, Interface Mode, Data Eye Mode. Default setting is **Auto**.
MBIST Aggressors(Note1)	Enable/Disable MBIST Aggressor test. Options available: Auto, Enabled, Disabled. Default setting is **Auto**.
MBIST Per Bit Slave Die Reporting(Note1)	Enable/Disable to report 2D data eye results in ABL log for each DQ, Chipselect, and Channel. Options available: Auto, Enabled, Disabled. Default setting is **Auto**.
Data Eye	Press [Enter] to configure advanced items.
Memory Healing BIST	Enable/Disable memory healing BIST. Options available: Disabled, PMU Mem BIST, Self-Healing Mem BIST, PMU, and Self-Healing Mem BIST. Default setting is **Disabled**.
DDR Healing BIST Execution Mode(Note2)	Options available: One Time, Every boot. Default setting is **One Time**.

Parameter	Description
PMU Mem BIST Algorithm(Note2)	Press [Enter] to enable/disable PMU Mem BIST Algorithm.
DDR Healing BIST Repair Type(Note2)	For DRAM errors found in the BIOS memory BIST select the repair type. Options available: Soft Repair, Hard Repair, No Rrepairs -Test only. Default setting is **Soft Repair**.

(Note2) This item appears when **DDR Healing BIST** is defined.

5-3-3-3-1 Data Eye



Parameter	Description
Data Eye	
Pattern Select	Options available: PRBS, SSO, Both. Default setting is **PRBS**.
Pattern Length	Determines the pattern length. The possible options are N=3....12.
Aggressor Channel	This item helps read the aggressors channels. Options available: One Sub-Channel, Half Channels, All Channels. Default setting is **All Channels**.
Aggressor Static Lane Control	Enable/Disable the Aggressor Static Lane Control function. Options available: Enabled, Disabled. Default setting is **Disabled**.
Aggressor Static Lane Select Upper 32 bits	This item is configurable when **Aggressor Static Lane Control** is set to **Enabled**.
Aggressor Static Lane Select Lower 32 bits	This item is configurable when **Aggressor Static Lane Control** is set to **Enabled**.
Aggressor Static Lane Select ECC	This item is configurable when **Aggressor Static Lane Control** is set to **Enabled**.
Aggressor Static Lane Value	This item is configurable when **Aggressor Static Lane Control** is set to **Enabled**.
Target Static Lane Control	Enable/Disable the Target Static Lane Control function. Options available: Enabled, Disabled. Default setting is **Disabled**.

Parameter	Description
Target Static Lane Select Upper 32 bits	This item is configurable when **Target Static Lane Control** is set to **Enabled**.
Target Static Lane Select Lower 32 bits	This item is configurable when **Target Static Lane Control** is set to **Enabled**.
Target Static Lane Select ECC	This item is configurable when **Target Static Lane Control** is set to **Enabled**.
Target Static Lane Value	This item is configurable when **Target Static Lane Control** is set to **Enabled**.
Worst Case Margin Granularity	Configures Worst Case Margin Granularity. Options available: Per Chip Select, Per Nibble. Default setting is **Worst Case Margin Only**.
Read Voltage Sweep Step Size	Configures the step size for read Data Eye voltage sweep. Options available: 1, 2, 4. Default setting is **2**.
Read Timing Sweep Step Size	Configures the step size for read Data Eye timing sweep. Options available: 1, 2, 4. Default setting is **1**.
Write Voltage Sweep Step	Configures the step size for write Data Eye voltage sweep. Options available: 1, 2, 4. Default setting is **2**.
Write Timing Sweep Step Size	Configures the step size for write Data Eye timing sweep. Options available: 1, 2, 4. Default setting is **1**.
Silent Execution	Enable Mbist Target Static Lane Control. Options available: Enabled, Disabled. Default setting is **Disabled**.

5-3-3-4 DDR RAS

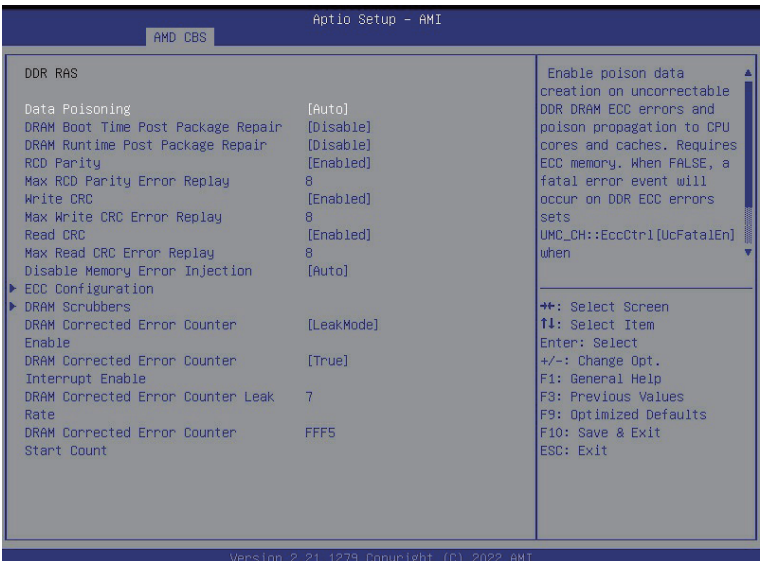

Parameter	Description
DDR RAS	
Data Poisoning	Enable/Disable the Data Poisoning function. Options available: Auto, Enabled, Disabled. Default setting is **Auto**.
DRAM Boot Time Package Repair	Enable/Disable the DRAM Boot Package Repair function. Options available: Enable/Disable. Default setting is **Disable**.
DRAM Runtime Post Package Repair	Enable/Disable the DRAM Runtime Post Package Repair function. Options available: Enable/Disable. Default setting is **Disable**.
RCD Parity	Enable/Disable the RCD Parity function. Options available: Auto, Enabled, Disabled. Default setting is **Enabled**.
Max RCD Parity Error Replay	Default setting is **8**.
Write CRC	Enable/Disable the Write CRC function. Options available: Auto, Enabled, Disabled. Default setting is **Enabled**.
Max Write CRC Error Replay	Default setting is **8**.
Read CRC	Enable/Disable the Read CRC function. Options available: Auto, Enabled, Disabled. Default setting is **Enabled**.
Max Read CRC Error Replay	Default setting is **8**.
Disable Memory Error Injection	Options available: False/True, Auto. Default setting is **Auto**.

Parameter	Description
ECC Configuration	Press [Enter] to configure advanced items. ◆ DRAM ECC Symbol Size – Configures the DRAM ECC Symbol Size. – Options available: Auto, x4, x8, x16. Default setting is **Auto**. ◆ DRAM ECC Enable – Enable/Disable DRAM ECC. When set to Auto, it will set ECC to enable. – Options available: Auto, Enabled, Disabled. Default setting is **Auto**. ◆ DRAM UECC Retry – Enable/Disable DRAM UECC Retry. – Options available: Auto, Enabled, Disabled. Default setting is **Disabled**. ◆ Max DRAM UECC Error Replay(Note) – Default setting is **8**. ◆ Memory Clear – Options available: Auto, Enabled, Disabled. Default setting is **Auto**. ◆ Address XDR after ECC – Options available: Auto, Enabled, Disabled. Default setting is **Disabled**.

(Note) This item available when **DRAM UECC Retry** is set to **Enabled**.

DRAM Scrubbers	Press [Enter] to configure advanced items. ◆ DRAM ECS Mode – Options available: Auto, AutoECS, ManualECS, DisableECS. Default setting is **Auto**. ◆ DRAM Redirect Scrubber Enable – Options available: Auto, Enabled, Disabled. Default setting is **Auto**. ◆ DRAM Scrub Redirection Limit – Options available: Auto, 8 Scrubs, 4 Scrubs, 2 Scrubs, 1 Scrub. Default setting is **Auto**. ◆ DRAM Scrub Time – Options available: Disabled, 1 hour, 4 hours, 6 hours, 8 hours, 12 hours, 16 hours, 24 hours, 48 hours. Default setting is **24 Hours**. ◆ DRAM Error Threshold Count – Options available: Auto, ETC_4, ETC_16, ETC_64, ETC_256, ETC_1024, ETC_4096. Default setting is **Auto**. ◆ DRAM ECS Count Mode – Options available: Auto, Row Count Mode, Code Word Count Mode. Default setting is **Auto**. ◆ DRAM AutoEcs during Self Refresh – Options available: Auto, AutoEcs Disabled, AutoEcs Enabled. Default setting is **Auto**. ◆ DRAM ECS WriteBack Suppression – Options available: Auto, Enable, Disable. Default setting is **Auto**.
DRAM Corrected Error Counter Enabled	Configure DRAM Corrected Error Counter function. Options available: Disable, NoLeakMode, Leak Mode, Auto. Default setting is **Leak Mode**.
DRAM Corrected Error Counter Interrupt Enable	Enable SMI when DRAM corrected Error Counter count exceeds the threshold value. Options available: Disable, NoLeakMode, Leak Mode, Auto. Default setting is **Leak Mode**.
DRAM Corrected Counter Leak Rate	Program Rate value for DRAM Corrected Error Counter function. Default setting is **7**.
DRAM Corrected Error Counter Start Count	Program starting value for DRAM Corrected Error Counter function. Default setting is **FFF5**.

5-3-3-5 DDR Bus Configuration

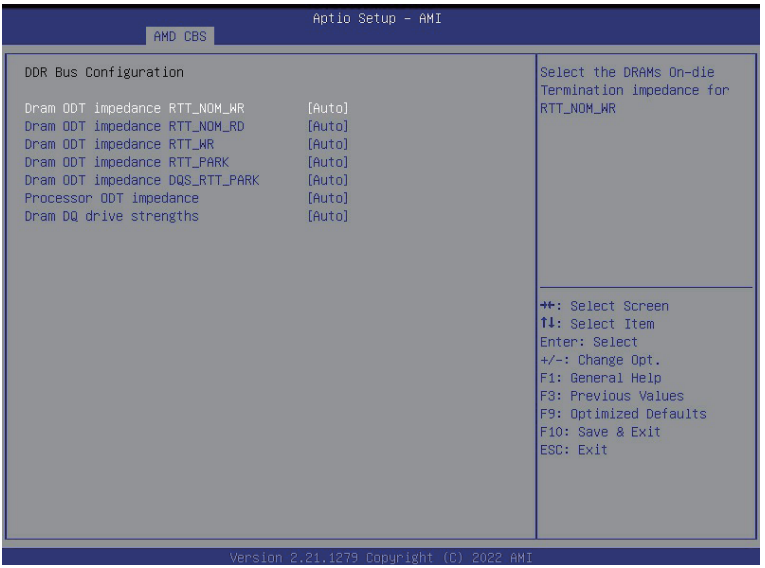

Parameter	Description
DDR Bus Configuration	
Dram ODT impedance RTT_ NOM_WR	Select the DRAMs On-die Termination impedance for RTT_NOM_WR. Options available: Auto, RTT_OFF, RZQ (240), RZQ/2 (120), RZQ/3 (80) RZQ/4 (60), RZQ/5(48), RZQ/6(40), RZQ/7(34). Default setting is **Auto**.
Dram ODT impedance RTT_ NOM_RD	Select the DRAMs On-die Termination impedance for RTT_NOM_RD. Options available: Auto, RTT_OFF, RZQ (240), RZQ/2 (120), RZQ/3 (80) RZQ/4 (60), RZQ/5(48), RZQ/6(40), RZQ/7(34). Default setting is **Auto**.
Dram ODT impedance RTT_ WR	Select the DRAMs On-die Termination impedance for RTT_WR. Options available: Auto, RTT_OFF, RZQ (240), RZQ/2 (120), RZQ/3 (80) RZQ/4 (60), RZQ/5(48), RZQ/6(40), RZQ/7(34). Default setting is **Auto**.
Dram ODT Timpedance RTT_ PARK	Select the DRAMs On-die Termination impedance for RTT_PARK. Options available: Auto, RTT_OFF, RZQ (240), RZQ/2 (120), RZQ/3 (80) RZQ/4 (60), RZQ/5(48), RZQ/6(40), RZQ/7(34). Default setting is **Auto**.
Dram ODT Timpedance DQS_ RTT_PARK	Select the DRAMs On-die Termination impedance for DQS_RTT_PARK. Options available: Auto, RTT_OFF, RZQ (240), RZQ/2 (120), RZQ/3 (80) RZQ/4 (60), RZQ/5(48), RZQ/6(40), RZQ/7(34). Default setting is **Auto**.

Parameter	Description
Processor ODT impedance	Select the ODT impedance for all DBYTE IOs. Options available: Auto, High Impedance, 480 ohm, 240 ohm, 160 ohm, 120 ohm, 96 ohm, 80 ohm, 68.6 ohm, 60 ohm, 53.3 ohm,48 ohm, 43.6 ohm, 40 ohm, 36.9 ohm, 34.3 ohm, 32 ohm, 30 ohm, 28.2 ohm, 26.7 ohm, 25.3 ohm. Default setting is **Auto**.
Dram DQ drive strengths	Select the Dram Pull-up and Pull-Down Output Driver Impedance for all DQ and DMI IOs.. Options available: Auto, 48 ohm, 40 ohm, 34 ohm, Default setting is **Auto**.

5-3-3-6 DDR Timing Configuration

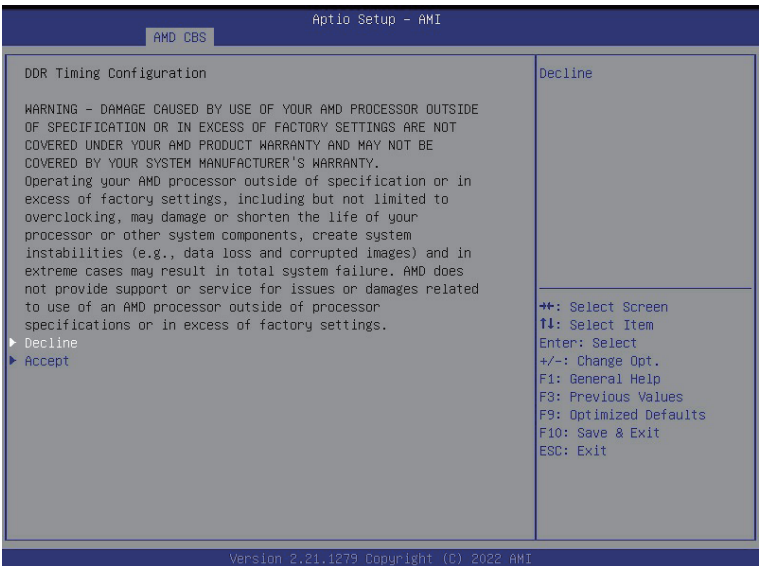

Parameter	Description
DDR Timing Configuration	Decline/Accept to configure the advanced items.
Accept	
Active Memory Timing Settings(Note)	Active memory Timing Settings. Options available: Auto, Enabled. Default setting is **Auto**.
Memory Target Speed	Specifies the memory target speed in MT/s. Options available: Auto, DDR3200, DDR3600, DDR4000, DDR4400, DDR4800, DDR5200, DDR5600. Default setting is **Auto**.
SPD Timing	Press [Enter] to configure advanced items.
Non-SPD Timing	Press [Enter] to configure advanced items.

(Note) Advanced items prompt when this item is defined.

5-3-3-7 DDR Training Options



Parameter	Description
DDR Training Options	
DRAM PDA Enumerate ID Programming	Specify PDA enumeration mode. Options available: Auto, Toggling PDA enumeration mode, Legacy PDA enumeration mode. Default setting is **Auto**.

5-3-3-8 DDR Security

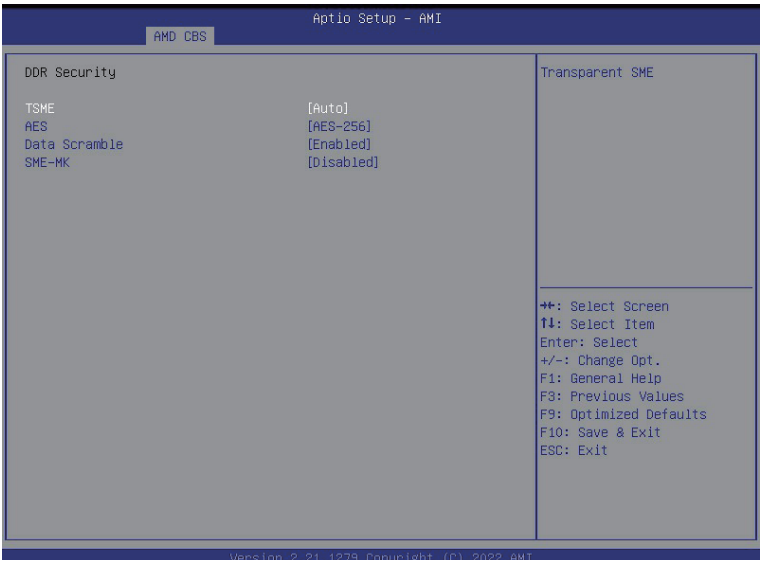

Parameter	Description
Security	
TSME	Enable/Disable Transparent SME. Options available: Auto, Enabled, Disabled. Default setting is **Auto**.
AES	Options available: AES-128, AES-256. Default setting is **AES-256**.
Data Scramble	Enable/Disable Data Scrambling. Options available: Enabled, Disabled. Default setting is **Enabled**.
SME-MK	Options available: Enabled, Disabled. Default setting is **Disabled**.

5-3-3-9 DDR PMIC Configuration

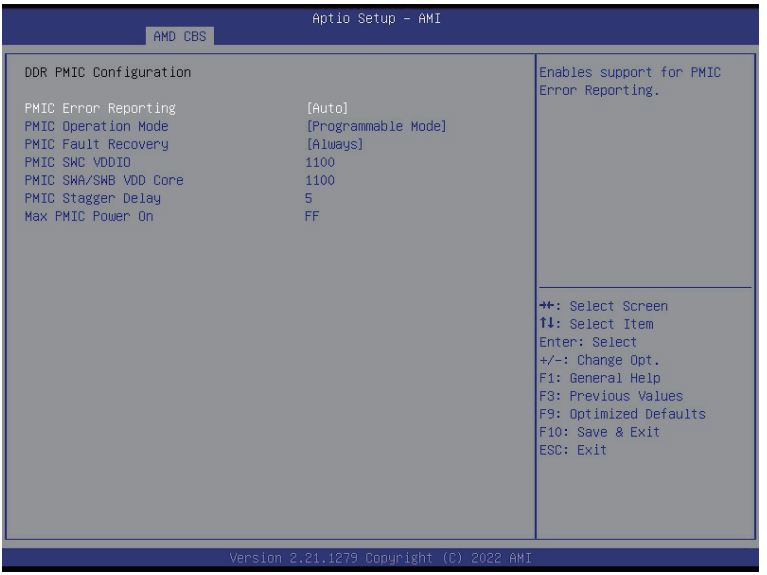

Parameter	Description
DDR PMIC Configuration	
PMIC Error Reporting	Enables support for PMIC Error Reporting. Options available: Auto, False, True. Default setting is **Auto**.
PMIC Operation Mode	Options available: Secure Mode, Programmable Mode. Default setting is **Programmable Mode**.
PMIC Fault Recovery	Options available: Always, Never, Once. Default setting is **Always**.
PMIC SWC VDDIO	Default setting is **1100**.
PMIC SWA/SWB VDD Core	Default setting is **1100**.
PMIC Stagger Delay	Default setting is **5**.
Max PMIC Power On	Default setting is **FF**.

5-3-3-10 DDR Miscellaneous

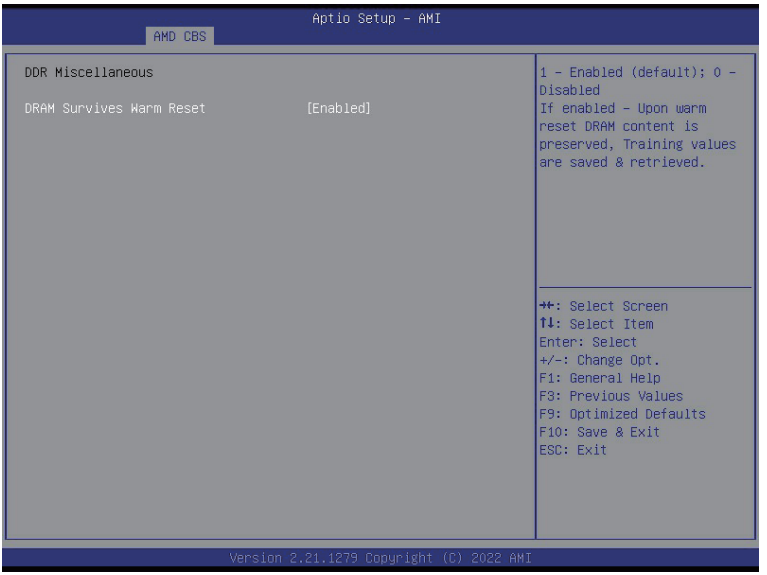

Parameter	Description
DDR Miscellaneous	
DRAM Survives Warm Reset	Options available: Enabled, Disabled. Default setting is **Enabled**.

5-3-4 NBIO Common Options

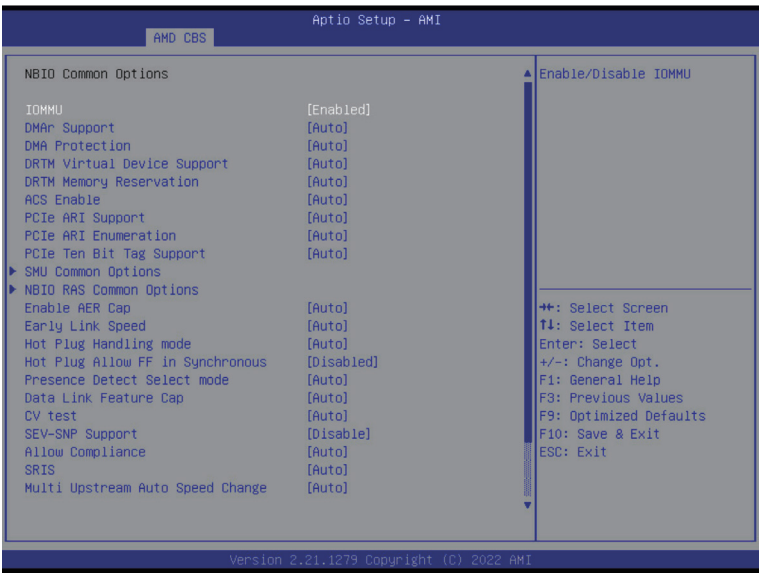

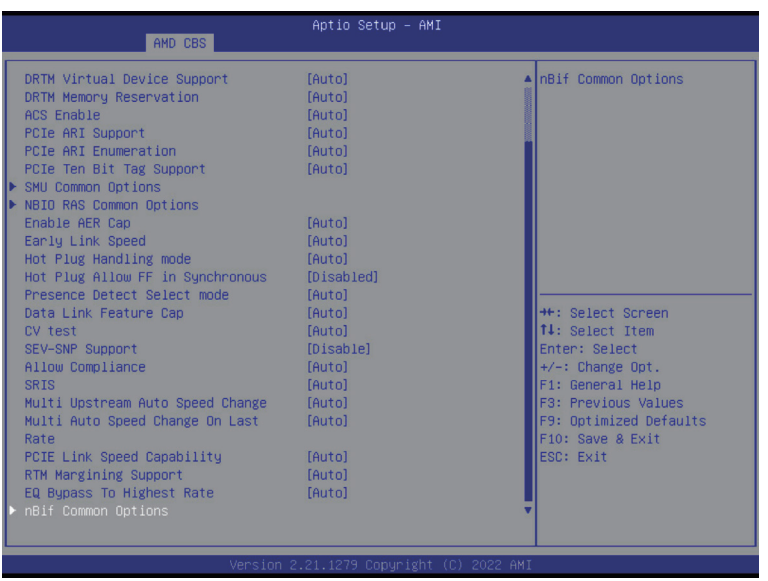

Parameter	Description
NBIO Common Options	
IOMMU	Enable/Disable the IOMMU function. Options available: Disabled, Enabled. Default setting is **Enabled**.
DMAr Support	Enable/Disable DMAr system protection during POST. Options available: Disabled, Enabled, Auto. Default setting is **Auto**.
DMA Protection	Enable/Disable DMA remap support in IVRS IVinfo Field. Options available: Auto, Enabled, Disabled. Default setting is **Auto**.
DRTM Virtual Device Support	Enable/Disable DRTM ACPI virtual device. Options available: Disabled, Enabled, Auto. Default setting is **Auto**.
DRTM Memory Reservation	Enable/Disable DRTM Memory reservation. Options available: Disabled, Enabled, Auto. Default setting is **Auto**.
ACS Enable	Enable/Disable ACS. Options available: Enable, Disabled, Auto. Default setting is **Auto**.
PCIe ARI Support	Enable/Disable Alternative Routing-ID Interpretation. Options available: Disable, Enable, Auto. Default setting is **Auto**.
PCIe ARI Enumeration	ARI Forwarding Enable for each downstream port. Options available: Disable, Enable, Auto. Default setting is **Auto**.
PCIe Ten Bit Tag Support	Enable/Disable PCIe ten bit tags for supported devices. (Auto=Disabled) Options available: Disable, Enable, Auto. Default setting is **Auto**.
SMU Common Options	Press [Enter] for configuration of advanced items.
NBIO RAS Common Options	Press [Enter] for configuration of advanced items.
Enable AER Cap	Enable/Disable Advanced Error Reporting Capability. Options available: Enable, Disabled, Auto. Default setting is **Auto**.
Early Link Speed	Configures Early Link Speed. Options available: Auto, Gen1, Gen2. Default setting is **Auto**.
Hot Plug Handling mode	Controls the Hot Plug Handling mode. Options available: OS First, Firmware First/EDR if OS supports, Firmware First but allow OS First, System Firmware Intermediary, Auto. Default setting is **Auto**.
Hot Plug Allow FF in Synchronous	Allows firmware first hot plug handling mode to operate in mode A and mode B synchronous mappings. Options available: Disabled, Enabled. Default setting is **Disabled**.
Presence Detect Select mode	Controls the Presence Detect Select mode. Options available: OR, AND, Auto. Default setting is **Auto**.

Parameter	Description
Data Link Feature Cap	Enable/Disable the data link feature capability. Options available: Enabled, Disabled, Auto. Default setting is **Auto**.
CV test	Enable/Disable the running PCIE CV tool support. Options available: Auto, Enabled, Disabled. Default setting is **Auto**.
SEV-SNP Support	Enable/Disable the SEV-SNP support. Options available: Disable, Enable. Default setting is **Disable**.
Allow Compliance	When enabled, allows the PCIe RP to enter Polling.Compliance state. Options available: Auto, Disable, Enable. Default setting is **Auto**.
SRIS	Options available: Auto, Disable, Enable. Default setting is **Auto**.
Multi Upstream Auto Speed Change	Defines the setting of this feature for all PCIe devices. Options available: Disabled, Enabled, Auto. Default setting is **Auto**.
Multi Auto Speed Change On Last Rate	Options available: Disable, Enable, Auto. Default setting is **Auto**.
PCIE Link Speed Capability	Options available: Maximum speed, Gen1, Gen2, Gen3, Gen4, Gen5, Auto. Default setting is **Auto**.
RTM Margining Support	Options available: Disable, Enable, Auto. Default setting is **Auto**.
EQ Bypass To Highest Rate	Options available: Disable, Enable, Auto. Default setting is **Auto**.
nBif Common Options	Press [Enter] for configuration of advanced items.

5-3-4-1 SMU Common Options

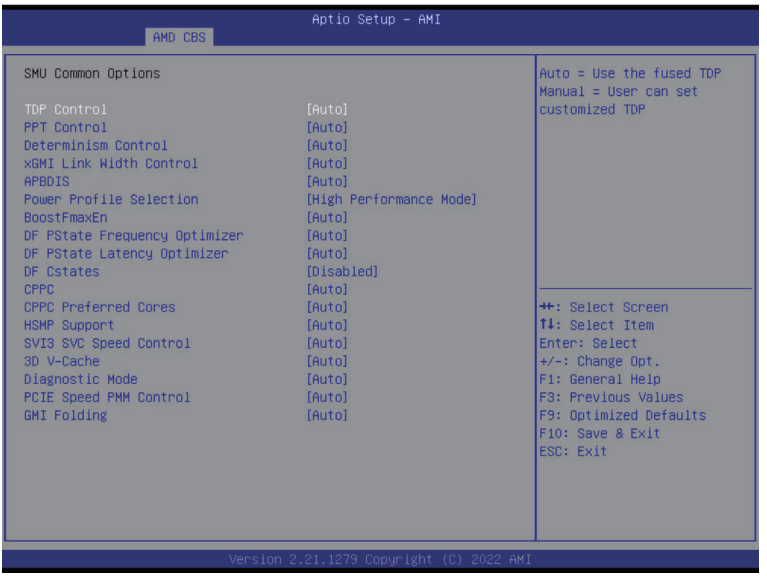

Parameter	Description
SMU Common Options	
TDP Control	Options available: Manual, Auto. Default setting is **Auto**.
PPT Control	Options available: Manual, Auto. Default setting is **Auto**.
Determinism Control	Selects use the fused Determinism or set customized Determinism. Options available: Manual, Auto. Default setting is **Auto**.
xGMI Link Width Control	Options available: Manual, Auto. Default setting is **Auto**.
APBDIS	Options available: 0, 1, Auto. Default setting is **Auto**.
Power Profile Selection	Options available: High Performace Mode, Efficiency Mode, Maximum IO Performance Mode. Default setting is **High Performace Mode**.
BoostFmaxEn	Options available: Manual, Auto. Default setting is **Auto**.
DF PState Frequency Optimizer	Options available: Auto, Enabled, Disabled. Default setting is **Auto**.
DF PState Latency Optimizer	Options available: Auto, Enabled, Disabled. Default setting is **Auto**.
DF Cstates	Options available: Disabled, Enabled, Auto. Default setting is **Disabled**.
CPPC	Enable/Disable the CPPC feature. Options available: Disabled, Enabled, Auto. Default setting is **Auto**.

Parameter	Description
CPPC Preferred Cores	Options available: Disabled, Enabled, Auto. Default setting is **Auto**.
HSMP Support	Enable/Disable the HSMP support. Options available: Disabled, Enabled, Auto. Default setting is **Auto**.
SVI3 SVC Speed Control	Options available: Auto, Manual. Default setting is **Auto**.
3D V-Cache	Options available: Auto, Disable, 1 stack, 2 stack, 4 stack. Default setting is **Auto**.
Diagnostic Mode	Options available: Disabled, Enabled, Auto. Default setting is **Auto**.
PCIE Speed PMM Control	Options available: Dynamic link speed determined by Power Management functionality, Static Target Link Speed (GEN4),Static Target Link Speed (GEN5), Auto. Default setting is **Auto**.
GMI Folding	Options available: Disabled, Enabled, Auto. Default setting is **Auto**.

5-3-4-2 NBIO RAS Common Options

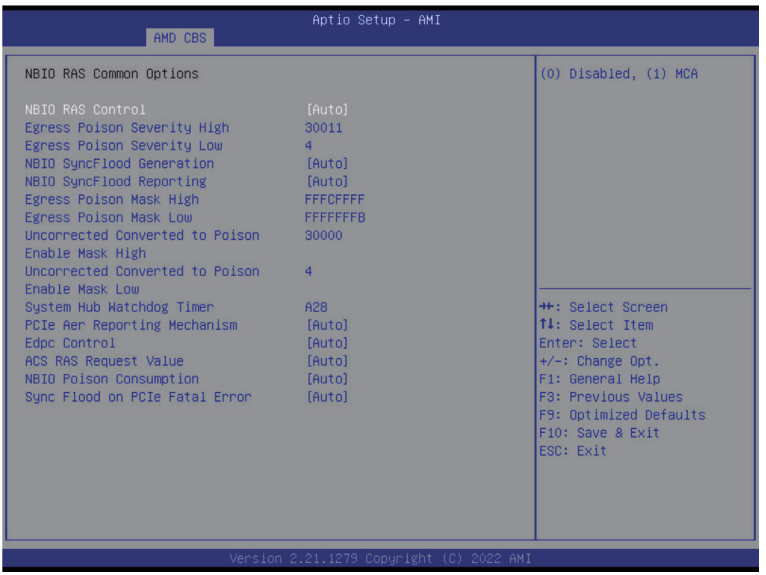

Parameter	Description
NBIO RAS Common Options	
NBIO RAS Control	Options available: Disabled, MCA, Auto. Default setting is **Auto**.
Egress Poison Severity High	Configures the Egress Poison High Severity. Each bit set to 1 enables High severity on the associated IOHC egress port. A bit of 0 indicates LOW severity.
Egress Poison Severity Low	Configures the Egress Poison Low Severity. Each bit set to 1 enables High severity on the associated IOHC egress port. A bit of 0 indicates LOW severity.
NBIO SyncFlood Generation	The value may be used to mask SyncFlood caused by NBIO RAS options. Options available: Enabled, Disabled, Auto. Default setting is **Auto**.
NBIO SyncFlood Reporting	The value may be used to enable SyncFlood reporting to APML. Options available: Enabled, Disabled, Auto. Default setting is **Auto**.
Egress Poison Mask High	Enables mask for masking of errors logged in EGRESS_POISON_ STATUS. For each bit set to 1, errors are masked. For each bit set to 0, errors trigger response actions.
Egress Poison Mask Low	Enables mask for masking of errors logged in EGRESS_POISON_ STATUS. For each bit set to 1, errors are masked. For each bit set to 0, errors trigger response actions.

Parameter	Description
Uncorrected Converted to Poison Enable Mask High	Enables mask for masking of uncorrectable parity errors on internal arrays.
Uncorrected Converted to Poison Enable Mask Low	Enables mask for masking of uncorrectable parity errors on internal arrays.
System Hub Watchdog Timer	Specifies the timer interval of the SYSHUB Watchdog timer in milliseconds.
PCIe Aer Reporting Mechanism	Selects the method of reporting AER errors from PCI Express. Options available: Firmware First, Firmware Frist but allow OS First, OS First, Auto. Default setting is **Auto**.
Edpc Control	Options available: Disabled, Enabled, Auto. Default setting is **Auto**.
ACS RAS Request Value	Options available: Direct Request Access Enabled, Request Blocking Enabled, Request Redirect Enabled, Auto. Default setting is **Auto**.
NBIO Poison Consumption	Options available: Auto, Enabled, Disabled. Default setting is **Auto**.
Sync Flood on PCIe Fatal Error	Options available: Auto, True, False. Default setting is **Auto**.

5-3-4-3 nBif Common Options

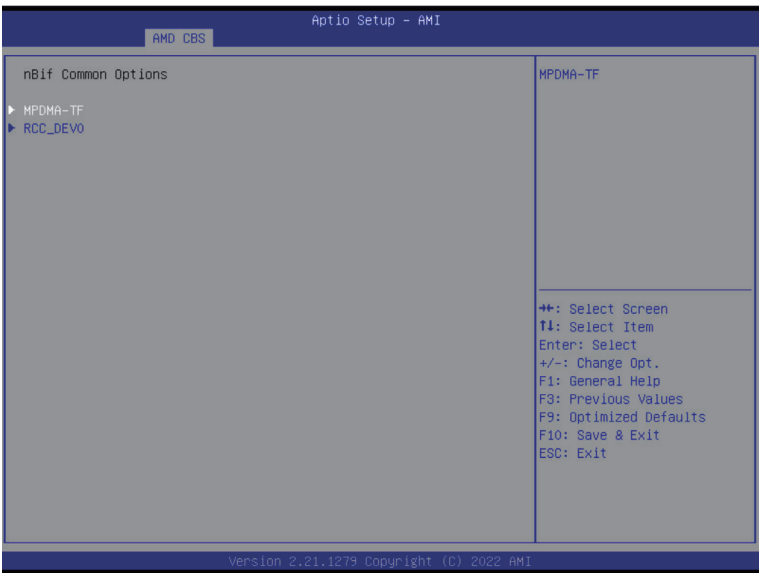

Parameter	Description
MPDMA-TF	◆ SRIOV – Options available: Auto, Disable, Enable. Default setting is **Auto**. ◆ ARI – Options available: Auto/Default, Disable, Enable. Default setting is **Auto/Default**. ◆ AER – Options available: Auto, Disable, Enable. Default setting is **Auto**. ◆ ACS – Options available: Auto, Disable, Enable. Default setting is **Auto**. ◆ ATS – Options available: Auto, Disable, Enable. Default setting is **Auto**. ◆ PASID – Options available: Auto, Disable, Enable. Default setting is **Auto**. ◆ RTR – Options available: Auto, Disable, Enable. Default setting is **Auto**. ◆ PAGE_REQ – Options available: Auto, Disable, Enable. Default setting is **Auto**. ◆ PWR – Options available: Auto, Disable, Enable. Default setting is **Auto**. ◆ ATC_ENABLE – Options available: Auto, Disable, Enable. Default setting is **Auto**.

Parameter	Description
RCC_DEV0	◆ ACS Rcc_Dev0 – Options available: Auto, Disable, Enable. Default setting is **Auto**. ◆ AER Rcc_Dev0 – Options available: Auto, Disable, Enable. Default setting is **Auto**. ◆ DlfEnableStrap1 – Options available: Auto, Disable, Enable. Default setting is **Auto**. ◆ Phy16GTStrap1 – Options available: Auto, Disable, Enable. Default setting is **Auto**. ◆ MarginEnStrap1 – Options available: Auto, Disable, Enable. Default setting is **Auto**. ◆ SourceValStrap5 – Options available: Auto, Disable, Enable. Default setting is **Auto**. ◆ TranslationalBlockingStrap5 – Options available: Auto, Disable, Enable. Default setting is **Auto**. ◆ P2pReq ACS Control – Options available: Auto, Disable, Enable. Default setting is **Auto**. ◆ P2pCompStrap5 – Options available: Auto, Disable, Enable. Default setting is **Auto**. ◆ UpstreamFwdStrap5 – Options available: Auto, Disable, Enable. Default setting is **Auto**. ◆ P2PEgressStrap5 – Options available: Auto, Disable, Enable. Default setting is **Auto**. ◆ DirectTranslatedStrap5 – Options available: Auto, Disable, Enable. Default setting is **Auto**. ◆ SsidEnStrap5 – Options available: Auto, Disable, Enable. Default setting is **Auto**. ◆ PriEnPageReq – Options available: Auto, Disable, Enable. Default setting is **Auto**. ◆ PriResetPageReq – Options available: Auto, Disable, Enable. Default setting is **Auto**. ◆ SourceVal ACS cntl – Options available: Auto, Disable, Enable. Default setting is **Auto**. ◆ TranslationalBlocking ACS Control – Options available: Auto, Disable, Enable. Default setting is **Auto**. ◆ P2pComp ACS Control – Options available: Auto, Disable, Enable. Default setting is **Auto**. ◆ UpstreamFwd ACS Control – Options available: Auto, Disable, Enable. Default setting is **Auto**. ◆ P2PEgress ACS Control – Options available: Auto, Disable, Enable. Default setting is **Auto**. ◆ P2pReqStrap5 – Options available: Auto, Disable, Enable. Default setting is **Auto**. ◆ E2E_PREFIX – Options available: Auto, Disable, Enable. Default setting is **Auto**.

Parameter	Description
RCC_DEV0 (continued)	◆ EXTENDED_FMT – Options available: Auto, Disable, Enable. Default setting is **Auto**.

5-3-5 FCH Common Options

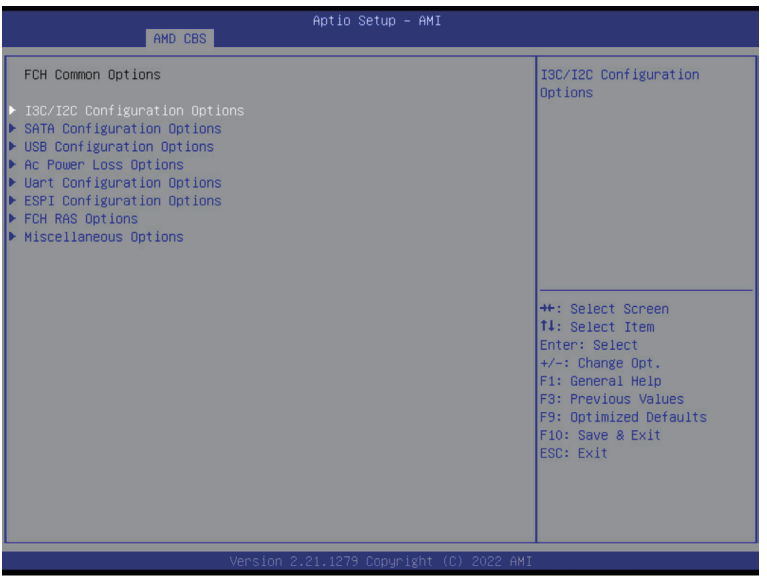

Parameter	Description
FCH Common Options	
I3C/I2C Configuration Options	Press [Enter] for configuration of advanced items.
SATA Configuration Options	Press [Enter] for configuration of advanced items.
USB Configuration Options	Press [Enter] for configuration of advanced items.
AC Power Loss Options	Press [Enter] for configuration of advanced items.
Uart Configuration Options	Press [Enter] for configuration of advanced items.
ESPI Configuration Options	Press [Enter] for configuration of advanced items.
FCH RAS Options	Press [Enter] for configuration of advanced items.
Miscellaneous Options	Press [Enter] for configuration of advanced items.

5-3-5-1 I3C/I2C Configuration Options

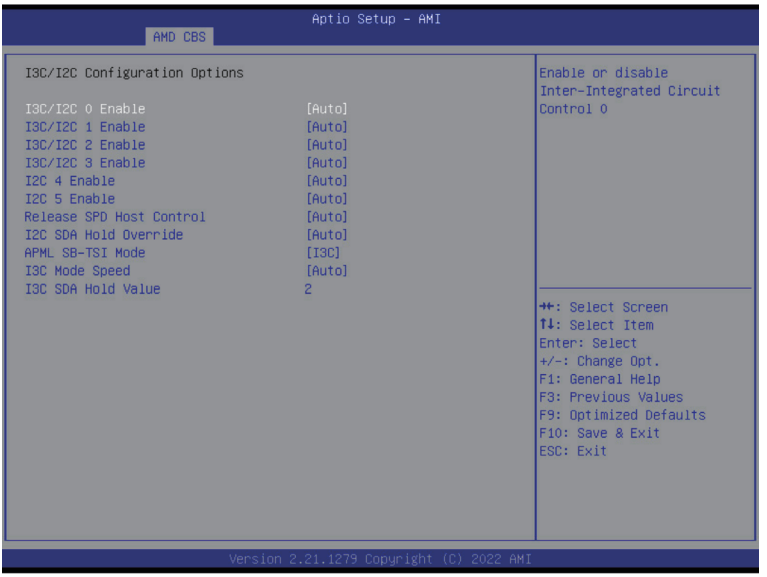

Parameter	Description
I3C/I2C Configuration Options	
I3C/I2C 0/1/2/3 Enable	Options available: Both Disabled, I3C Enabled, I2C Enabled, Auto. Default setting is **Auto**.
I2C 4/5 Enable	Options available: Disabled, Enabled, Auto. Default setting is **Auto**.
Release SPD Host Control	Options available: Disabled, Enabled, Auto. Default setting is **Auto**.
I2C SDA Hold Override	Options available: Disabled, Enabled, Auto. Default setting is **Auto**.
APML SB-TSI Mode	Options available: I3C, I2C. Default setting is **I3C**.
I3C Mode Speed	Options available: SDR2(6MHz), SDR0(12.5MHz), Auto. Default setting is **Auto**.
I3C SDA Hold Value	Configures I3C SDA Hold value.

5-3-5-2 SATA Configuration Options

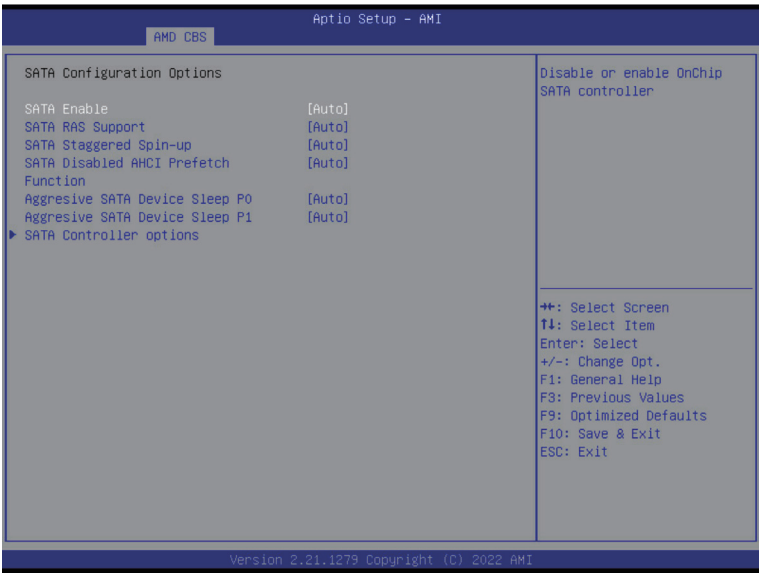

Parameter	Description
SATA Configuration Options	
SATA Enable	Enable/Disable OnChip SATA controller. Options available: Disabled, Enabled, Auto. Default setting is **Auto**.
SATA RAS Support	Options available: Disabled, Enabled, Auto. Default setting is **Auto**.
SATA Staggered Spin-up	Options available: Disabled, Enabled, Auto. Default setting is **Auto**.
SATA Disabled AHCI Prefetch Function	Options available: Disabled, Enabled, Auto. Default setting is **Auto**.
Aggressive SATA Device Sleep P0/P1	Options available: Disabled, Enabled, Auto. Default setting is **Auto**.
SATA Controller options	Press [Enter] for configuration of advanced items. ◆ SATA Controller Enable ◆ SATA Controller eSATA ◆ SATA Controller DevSlp ◆ SATA Controller SGPIO

5-3-5-3 USB Configuration Options

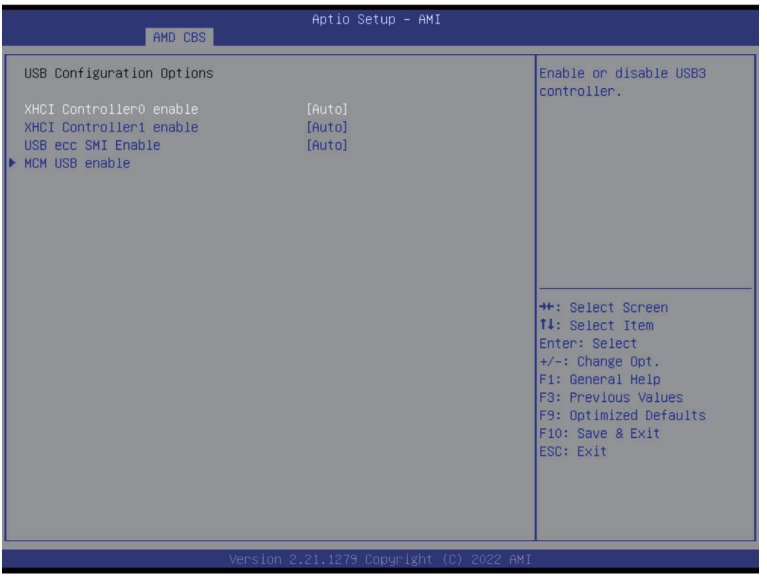

Parameter	Description
USB Configuration Options	
XHCI Controller0/1 enable	Enable/Disable USB controller. Options available: Enabled, Disabled, Auto. Default setting is **Auto**.
USB ecc SMI Enable	Options available: Enable, Off, Auto. Default setting is **Auto**.
MCM USB enable	Press [Enter] for configuration of advanced items. ◆ XHCI2/ XHCI3 enable (Socket1) – Options available: Enabled, Disabled, Auto. Default setting is **Auto**.

5-3-5-4 AC Power Loss Options

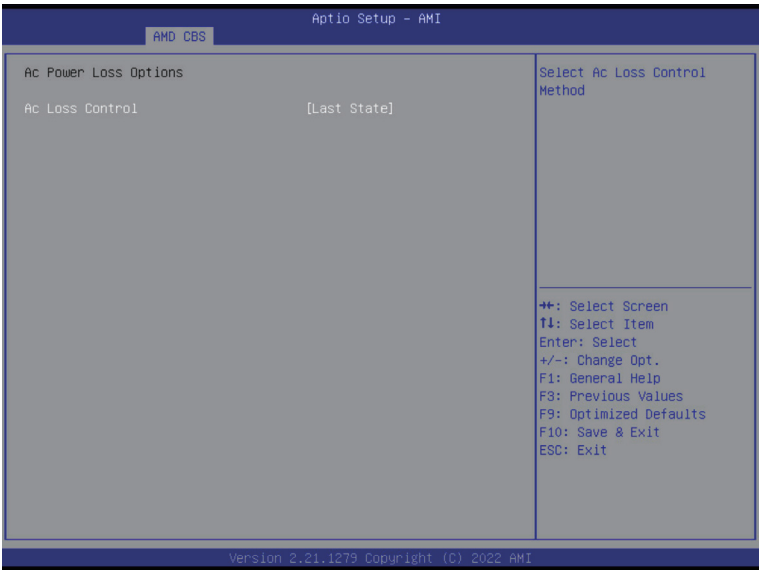

Parameter	Description
AC Power Loss Options	
AC Loss Control	Selects the AC Loss Control Method. Options available: Power Off, Power On, Last State. Default setting is **Last State**.

5-3-5-5 Uart Configuration Options

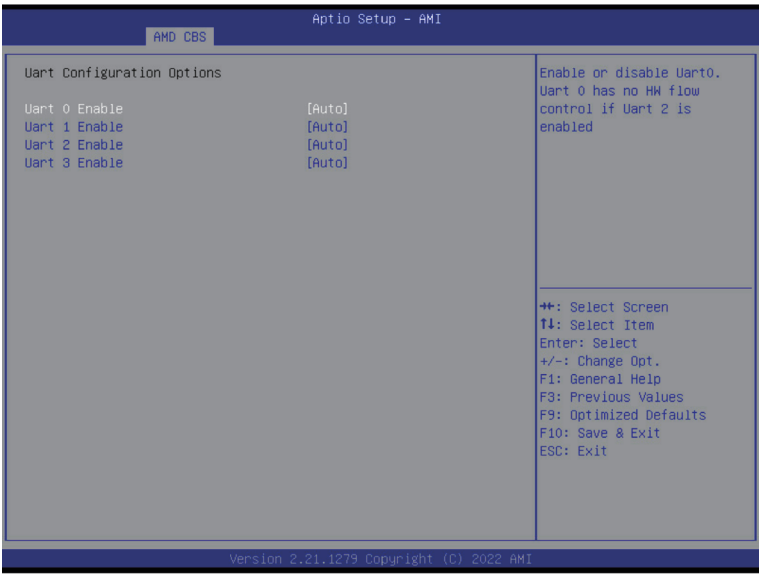

Parameter	Description
Uart Configuration Options	
Uart 0/1/2/3 Enable	Options available: Disabled, Enabled, Auto. Default setting is **Auto**.

5-3-5-6 ESPI Configuration Options

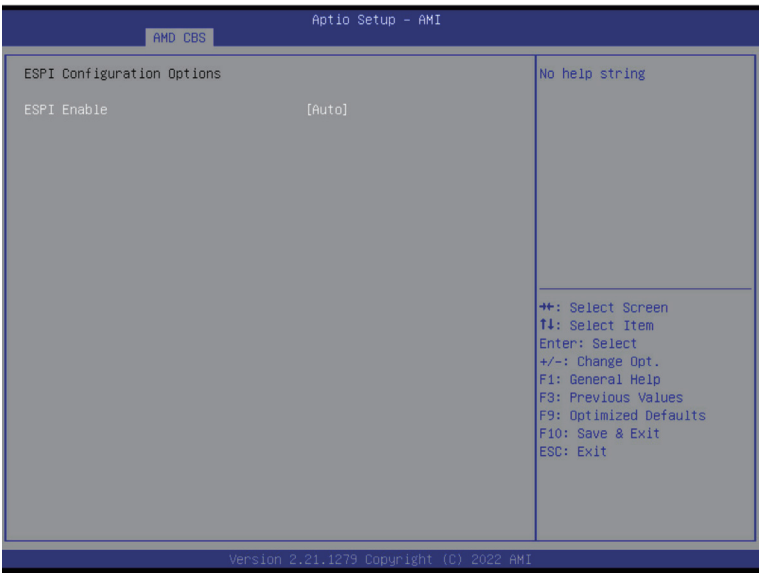

Parameter	Description
ESPI Configuration Options	
ESPI Enable	Options available: Disabled, Enabled, Auto. Default setting is **Auto**.

5-3-5-7 FCH RAS Options

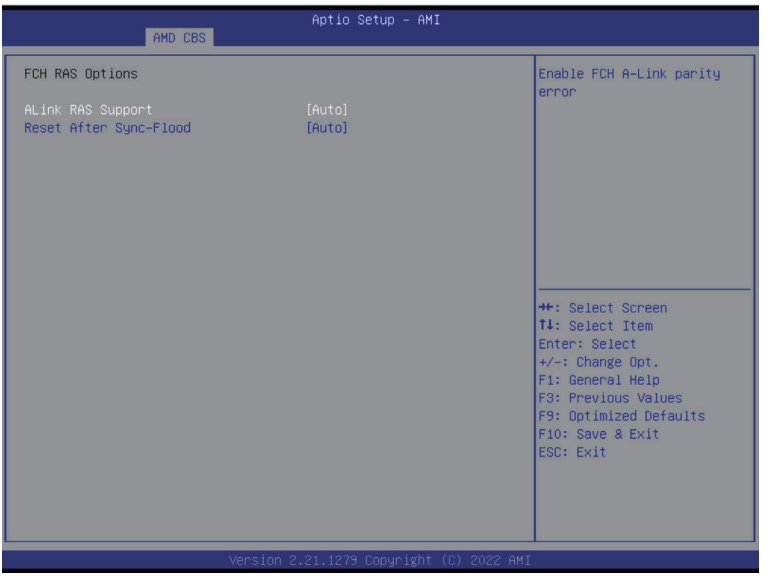

Parameter	Description
FCH RAS Options	
ALink RAS Support	Enable/Disable the ALink RAS Support. Options available: Disabled, Enabled, Auto. Default setting is **Auto**.
Reset after sync flood	Enables AB to forward downstream sync-flood message to system controller. Options available: Enable, Disable, Auto. Default setting is **Auto**.

5-3-5-8 Miscellaneous Options

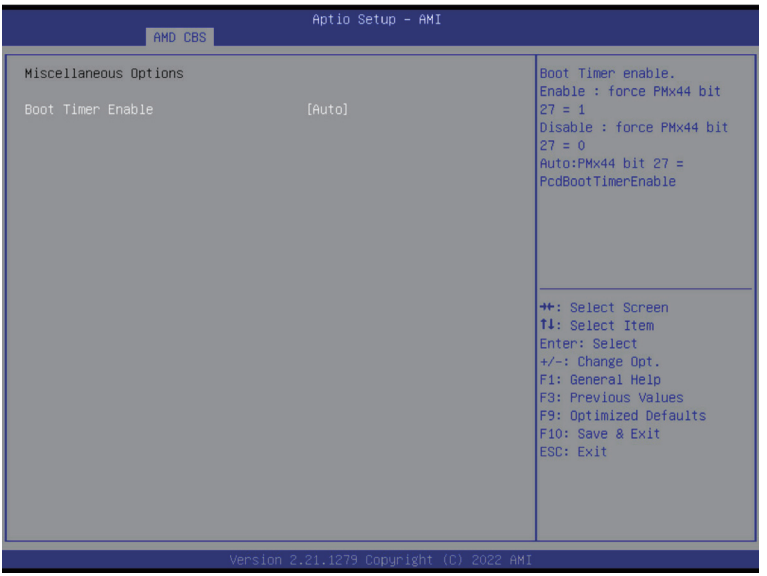

Parameter	Description
Miscellaneous Options	
Boot Timer Enable	Enable/Disable Boot Timer. Options available: Disabled, Enabled, Auto. Default setting is **Auto**.

5-3-6 NTB Common Options

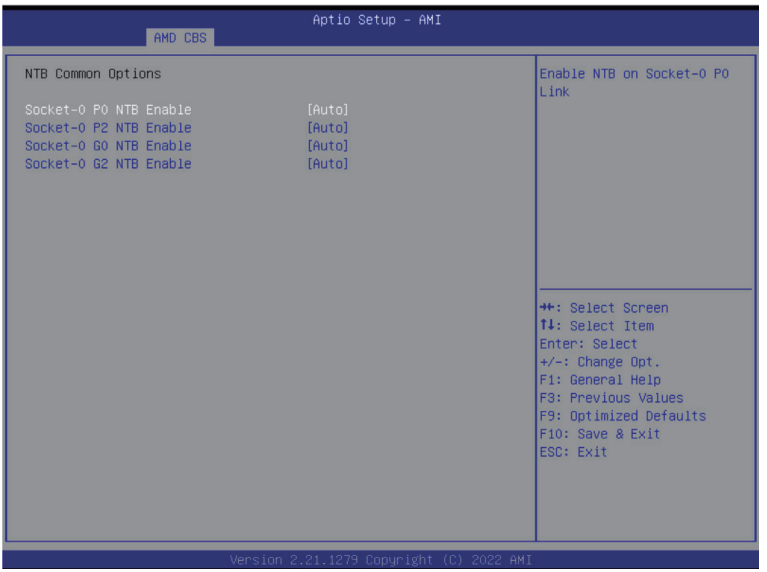

Parameter	Description
NTB Common Options	
Socket-0 P0/P2 NTB Enable	Enable/Disable NTB on Socket-0 P0/P2 Link. Options available: Auto, Enable, Disable. Default setting is **Auto**.
Socket-0 G0/G2 NTB Enable	Enable/Disable NTB on Socket-0 G0/G2 Link. Options available: Auto, Enable, Disable. Default setting is **Auto**.

5-3-7 SOC Miscellaneous Control

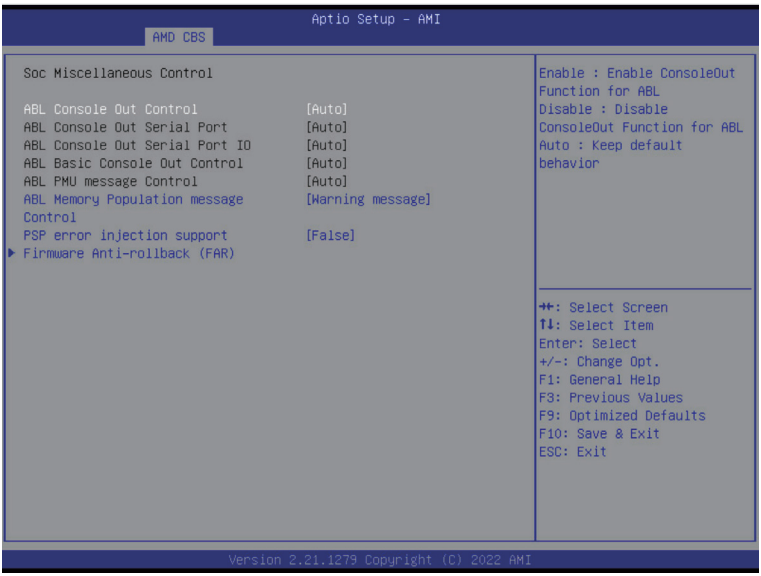

Parameter	Description
SOC Miscellaneous Control	
ABL Console Out Control(Note)	Enable/Disable the ConsoleOut function for ABL. Options available: Disable, Enable, Auto. Default setting is **Auto**.
ABL Console Out Serial Portl(Note)	Options available: eSPI, SOC UART0, SOC UART1, Auto. Default setting is **Auto**.
ABL Console Out Serial Port IO	Options available: 0x3F8, 0x2F8, 0x3E8, 0x2E8, Auto. Default setting is **Auto**.
ABL Basic Console Out Control	Enable/Disable the Basic ConsoleOut function for ABL. Options available: Disable, Enable, Auto. Default setting is **Auto**.
ABL PMU message Control	To Control the total number of PMU debug messages. Options available: Auto, Detailed debug message, Coarse debug message, Stage completion, Assertion messages, Firmware completion message only. Default setting is **Auto**.
ABL Memory Population message Control	Options available: Warning message, Fatal error. Default setting is **Warning message**.
PSP error injection support	Options available: False, True. Default setting is **False**.

(Note) Advanced items are configurable when this item is defined.

Firmware Anti-rollback (FAR)	Press [Enter] for configuration of advanced items. ◆ FAR enforcement state – Default setting is **Enabled**. ◆ SPL value in the CPU Fuse ◆ SPL value in the SPL table ◆ FAR Switch – Options available: Disabled, Enabled, Auto. Default setting is **Auto**.

5-3-8 Workload Tuning

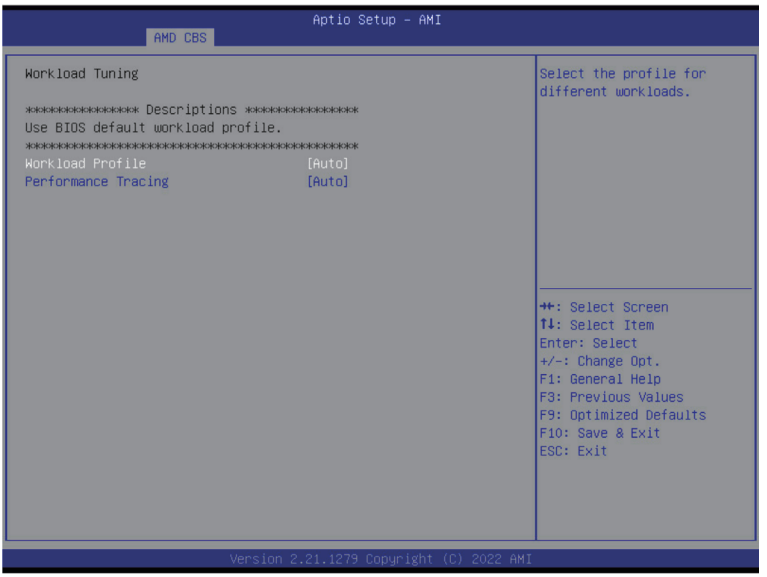

Parameter	Description
Workload Tuning	
Workload Profile	Select the profile for different workloads. Options available: CPU Intensive, Java Throughput, Java Latency, Power Efficiency, Memory Throughput Intensive, Storgae IO Intensive, NIC Throughput Intensive, NIC Latency Sensitive, Accelerator Throughput, VMware vSphere Optimized, Linux KVM Optimized, Container Optimized, RDBMS Optimized, Big Data Analytics Optimized, IOT Gateway, HPC Optimized, OpenStack NFV, OpenStack for ReakTime Kernel, Auto. Default setting is **Auto**.
Performance Tracing	Enable to allow capturing performance traces. Options available: Disabled, Enabled, Auto. Default setting is **Auto**.

5-3-9 CXL Common Options

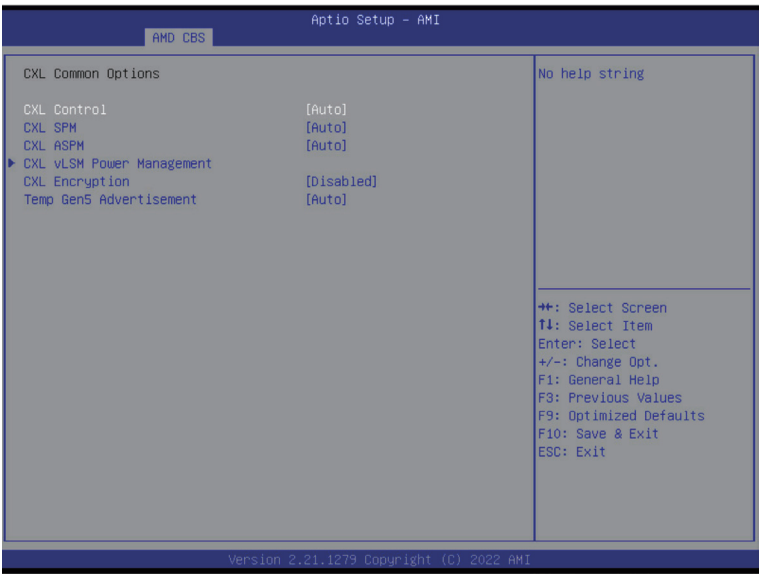

Parameter	Description
CXL Common Options	
CXL Control	Options available: Auto, Enabled, Disabled. Default setting is **Auto**.
CXL SPM	Options available: Auto, Enabled, Disabled. Default setting is **Auto**.
CXL ASPM	Options available: Auto, Enabled, Disabled. Default setting is **Auto**.
CXL vLSM Power Management	Press [Enter] for configuration of advanced items. ◆ CXL.io – L1/L2 • Options available: Auto, Enabled, Disabled. Default setting is **Auto**. ◆ CXL.camem – L1/L2 • Options available: Auto, Enabled, Disabled. Default setting is **Auto**.
CXL Encryption	Options available: Enabled, Disabled. Default setting is **Disabled**.
Temp Gen5 Advertisement	Options available: Disable, Enable, Auto. Default setting is **Auto**.

5-4 AMD PBS Menu

AMD PBS Option menu displays submenu options for configuring the function of AMD PBS. Select a submenu item, then press [Enter] to access the related submenu screen.

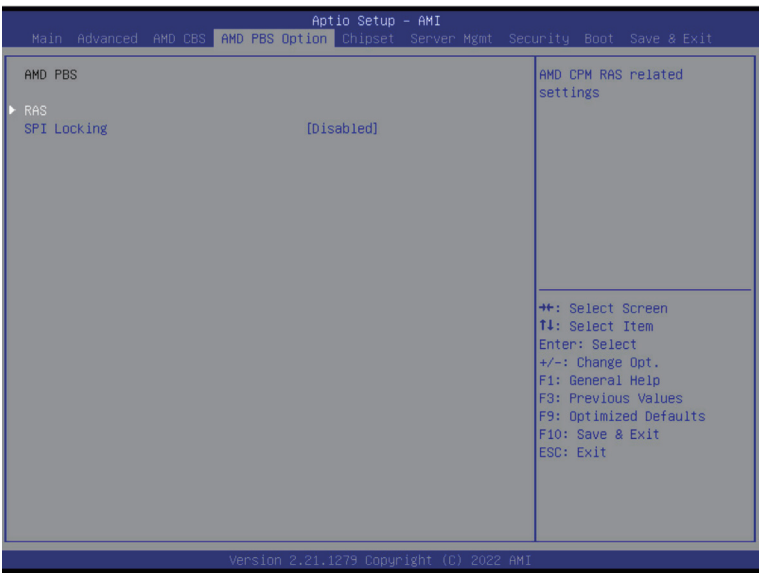

Parameter	Description
RAS	Press [Enter] for configuration of advanced items.
SPI Locking	Enable/Disable SPI Locking for protect ROM part. Options available: Disabled, Enabled. Default setting is **Disabled**.

5-4-1 RAS

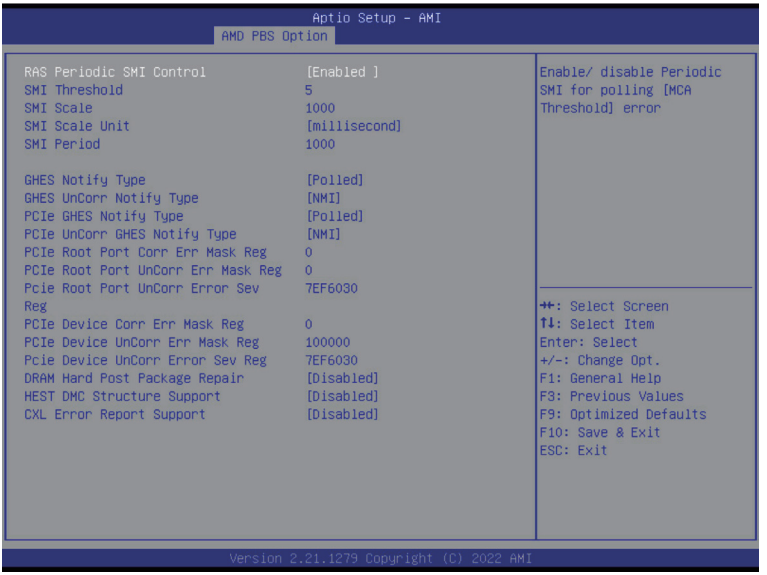

Parameter	Description
RAS Periodic SMI Control	Enable/Disable the Periodic SMI for polling [MCA Threshold] error. Options available: Disabled, Enabled. Default setting is **Enabled**.
SMI Threshold	Configures the SMI Threshold value.
SMI Scale	Configures the SMI Scale value.
SMI Scale Unit	Defines the unit of time scale. Options available: millisecond, second, minute. Default setting is **millisecond**.
SMI Period	Configures the SMI Period.
GHES Notify Type	Selects the Notification type for deferred/ corrected errors. Options available: Polled, SCI. Default setting is **Polled**.
GHES UnCorr Notify Type	Selects the Notification type for uncorrected errors. Options available: Polled, NMI. Default setting is **NMI**.
PCIe GHES Notify Type	Selects the Notification type for PCIe corrected errors. Options available: Polled, SCI. Default setting is **Polled**.
PCIe UnCorr GHES Notify Type	Selects the Notification type for PCIe uncorrected errors. Options available: Polled, NMI. Default setting is **NMI**.
PCIe Root Port Corr Err Mask Reg	Initialize the PCIe AER Corrected Error Mask register of Root Port.

Parameter	Description
PCIe Root Port UnCorr Err Mask Reg	Initialize the PCIe AER Uncorrected Error Mask register of Root Port.
PCIe Root Port UnCorr Err Sev Reg	Initialize the PCIe AER Uncorrected Error Severity register of Root Port.
PCIe Device Corr Err Mask Reg	Initialize the PCIe AER Corrected Error Mask register of PCIe device.
PCIe Device UnCorr Err Mask Reg	Initialize the PCIe AER Uncorrected Error Mask register of PCIe device.
PCIe Device UnCorr Err Sev Reg	Initialize the PCIe AER Uncorrected Error Severity register of PCIe device.
DRAM Hard Post Package Repair	This feature allows spare DRAM rows to replace malfunctioning rows via an in-field repair mechanism. Options available: Disabled, Enabled. Default setting is **Disabled**.
HEST DMC Structure Support	HEST DMC (Deferred Machine Check) Structure Support. Options available: Disabled, Enabled. Default setting is **Disabled**.
CXL Error Report Support	Enable/Disable CXL Error Reporting. Options available: Disabled, Enabled. Default setting is **Disabled**.

5-5 Chipset Setup Menu

Chipset Setup menu displays submenu options for configuring the function of the North Bridge. Select a submenu item, then press <Enter> to access the related submenu screen.

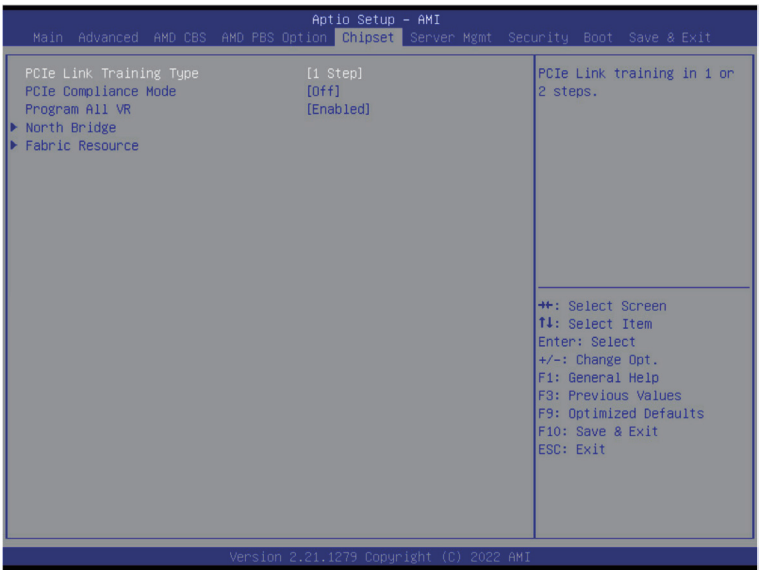

Parameter	Description
PCIe Link Training Type	Options available: 1 Step, 2 Step. Default setting is **1 Step.**
PCIe Compliance Mode	Options available: Off, On. Default setting is **Off.**
Program All VR	Enable/Disable program all VR on MB. Options available: Disabled, Enabled. Default setting is **Enabled**.
North Bridge	Press [Enter] for configuration of advanced items.
Fabric Resource	Press [Enter] for configuration of advanced items.

5-5-1 North Bridge

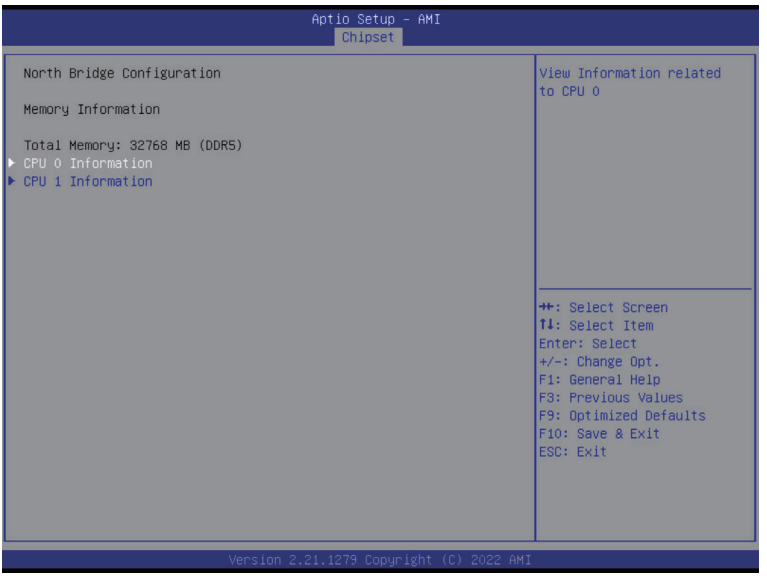

Parameter	Description
North Bridge Configuration Memory Information	
Total Memory	Displays the total memory information.
CPU 0/1 Information	Press [Enter] to view information related to CPU 0/1.

5-5-2 Fabric Resource

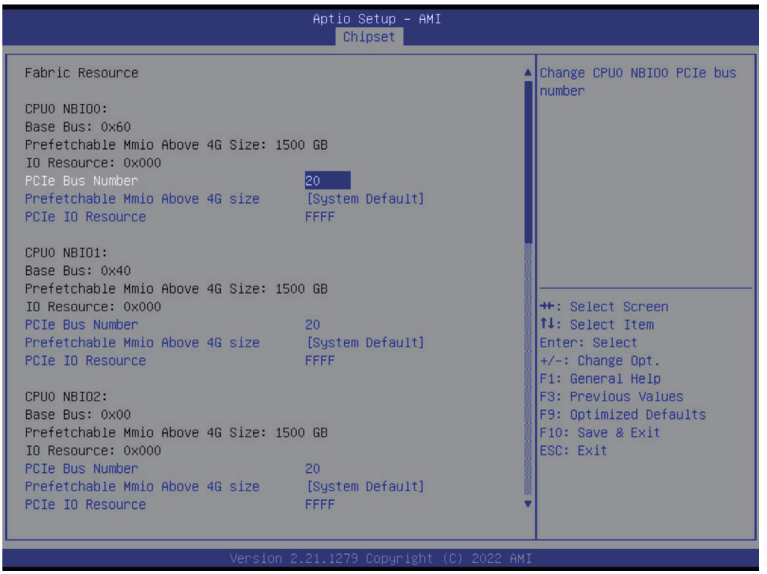

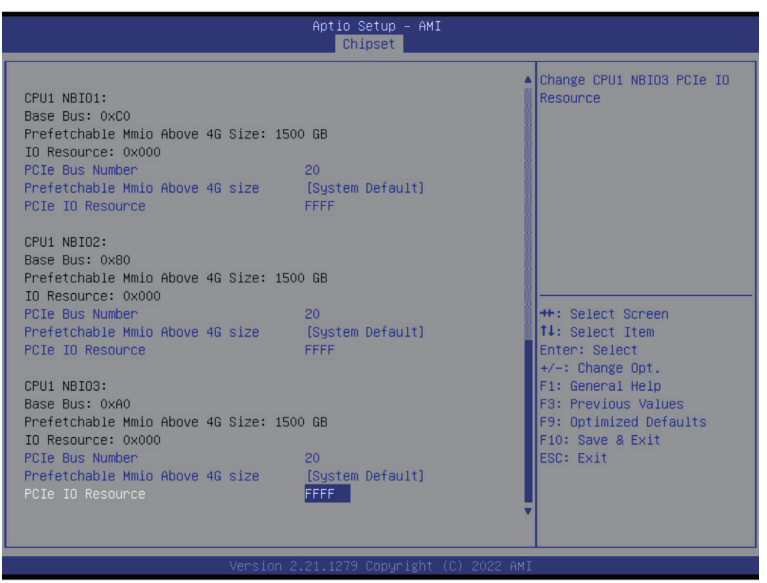

Parameter	Description
Fabric Resource	
CPU 0/1 NBIO_# PCIe Bus Number	Change CPU 0/1 NBIO_# PCIe Bus Number.
Prefetchable Mmio Above 4G size	Change CPU 0/1 NBIO_# Prefetchable MMIO Above 4G Size. Options available: System Default, 0, 1G, 2G, 4G, 8G, 16G, 32G, 64G, 128G, 256G, 512G, 1T, 2T, 4T, 8T. Default setting is **System Default**.
PCIe IO Resource	Change CPU 0/1 NBIO_# PCIe IO Resource.

5-6 Server Management Menu

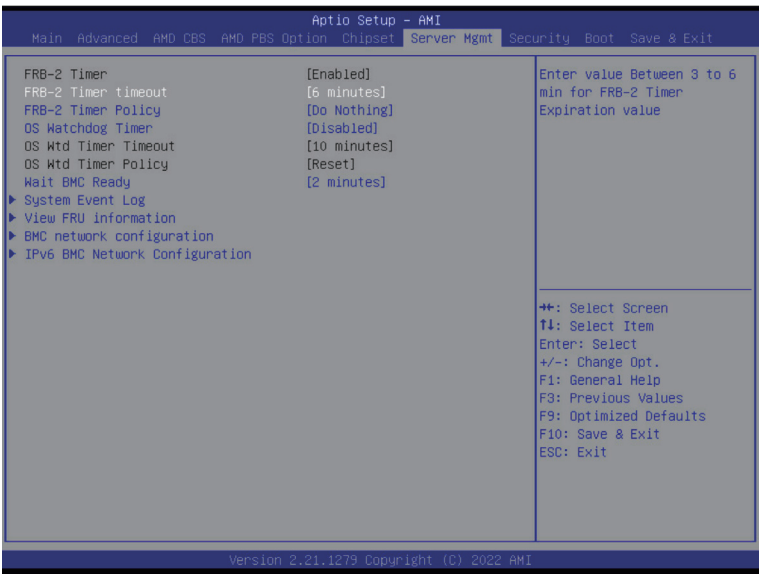

Parameter	Description
FRB-2 Timer	Enable/Disable FRB-2 timer (POST timer). Default setting is **Enabled**.
FRB-2 Timer timeout	Configures the FRB2 Timer timeout. Options available: 3 minutes, 4 minutes, 5 minutes, 6 minutes. Default setting is **6 minutes**.
FRB-2 Timer Policy	Configures the FRB2 Timer policy. Options available: Do Nothing, Reset, Power Down, Power Cycle. Default setting is **Do Nothing**.
OS Watchdog Timer	Enable/Disable OS Watchdog Timer function. Options available: Enabled, Disabled. Default setting is **Disabled**.
OS Wtd Timer Timeout(Note)	Configures OS Watchdog Timer. Options available: 5 minutes, 10 minutes, 15 minutes, 20 minutes. Default setting is **10 minutes**.
OS Wtd Timer Policy(Note)	Configure OS Watchdog Timer Policy. Options available: Do Nothing, Reset, Power Down, Power Cycle. Default setting is **Reset**.
Wait BMC Ready	Post wait BMC ready and reboot system. Options available: Disabled, 2 minutes, 4 minutes, 6 minutes. Default setting is **2 minutes**.

(Note) This item is configurable when **OS Watchdog Timer** is set to **Enabled**.

Parameter	Description
System Event Log	Press [Enter] to configure advanced items.
View FRU Information	Press [Enter] to view the FRU information.
BMC network configuration	Press [Enter] to configure advanced items.
IPv6 BMC Network Configuration	Press [Enter] to configure advanced items.

5-6-1 System Event Log

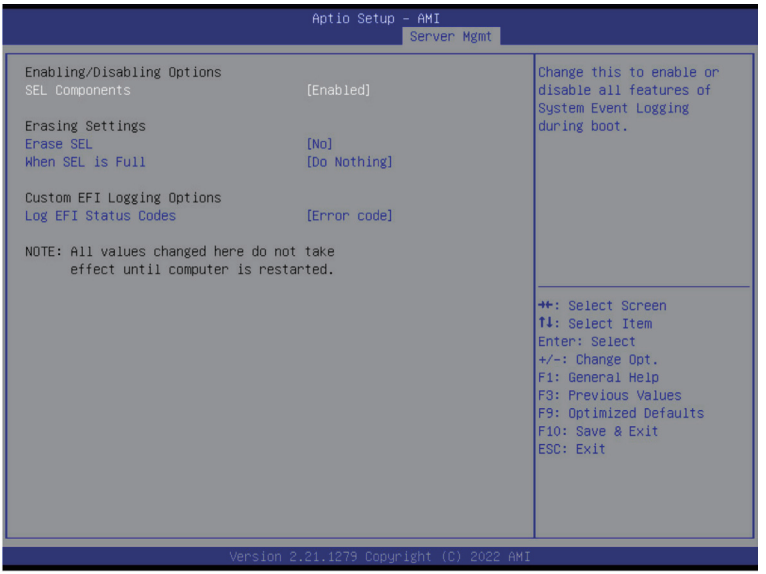

Parameter	Description
Enabling / Disabling Options	
SEL Components	Change this item to enable or disable all features of System Event Logging during boot. Options available: Disabled, Enabled. Default setting is **Enabled**.
Erasing Settings	
Erase SEL	Choose options for erasing SEL. Options available: No/Yes, On next reset/Yes, On every reset. Default setting is **No**.
When SEL is Full	Choose options for reactions to a full SEL. Options available: Do Nothing, Erase Immediately. Default setting is **Do Nothing**.
Custom EFI Logging Options	
Log EFI Status Codes	Enable/Disable the logging of EFI Status Codes (if not already converted to legacy). Options available: Disabled, Both, Error code, Progress code. Default setting is **Error code**.

5-6-2 View FRU Information

The FRU page is a simple display page for basic system ID information, as well as System product information. Items on this window are non-configurable.

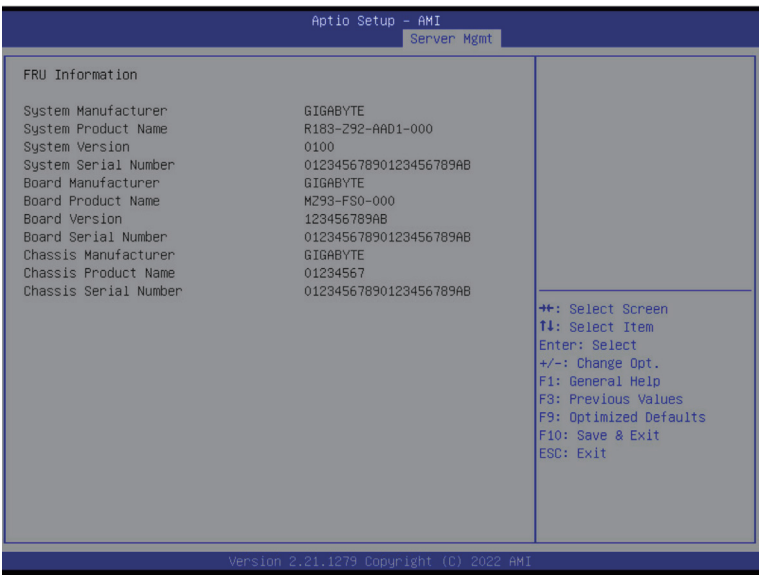

(Note) The model name will vary depends on the product you purchased

5-6-3 BMC Network Configuration

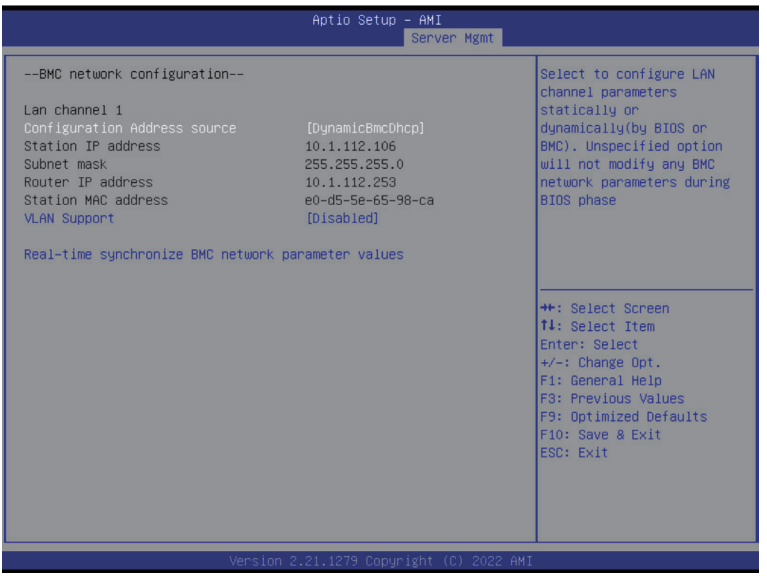

Parameter	Description
BMC network configuration	
Lan Channel 1	
Configuration Address source	Selects to configure LAN channel parameters statically or dynamically (DHCP). Do nothing option will not modify any BMC network parameters during BIOS phase. Options available: Unspecified, Static, DynamicBmcDhcp. Default setting is **DynamicBmcDhcp**.
Station IP address	Displays IP Address information.
Subnet mask	Displays Subnet Mask information. Please note that the IP address must be in three digitals, for example, 192.168.000.001.
Router IP address	Displays the Router IP Address information.
Station MAC address	Displays the MAC Address information.
VLAN Support	Set BMC to enable/disable VLAN support. Options available: Enabled, Disabled. Default setting is **Disabled**.
Real-time synchronize BMC network parameter values	Press [Enter] will set Address source(Static/DHCP) to BMC and then get Station IP address, Subnet mask and Router IP address from BMC.

5-6-4 IPv6 BMC Network Configuration

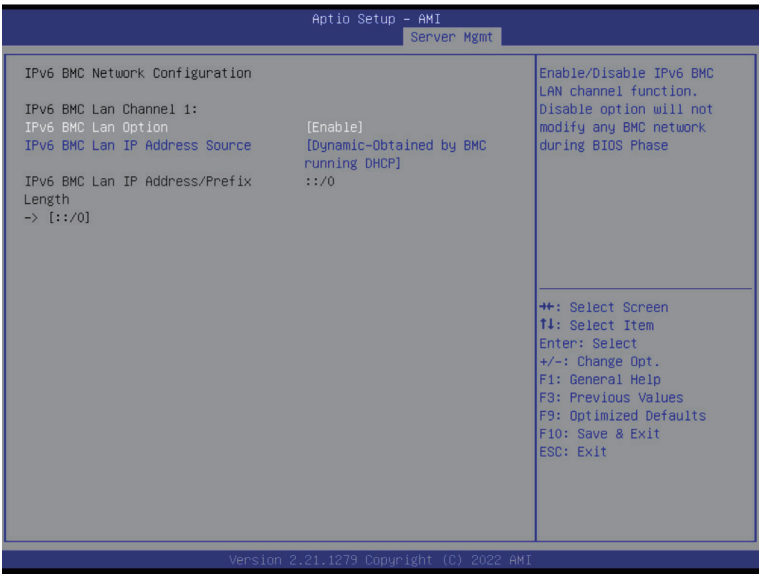

Parameter	Description
IPv6 BMC network configuration	
IPv6 BMC Lan Channel 1	
IPv6 BMC Lan Option	Enable/Disable IPv6 BMC LAN channel function. When this item is disabled, the system will not modify any BMC network during BIOS phase. Options available: Unspecified, Disable, Enable. Default setting is **Enable**.
IPv6 BMC Lan IP Address Source	Selects to configure LAN channel parameters statically or dynamically (by BIOS or BMC). Options available: Unspecified, Static, Dynamic-Obtained by BMC running DHCP. Default setting is **Dynamic-Obtained by BMC running DHCP**.
IPv6 BMC Lan IP Address/ Prefix Length	Check if the IPv6 BMC LAN IP address matches those displayed on the screen.

5-7 Security Menu

The Security menu allows you to safeguard and protect the system from unauthorized use by setting up access passwords.

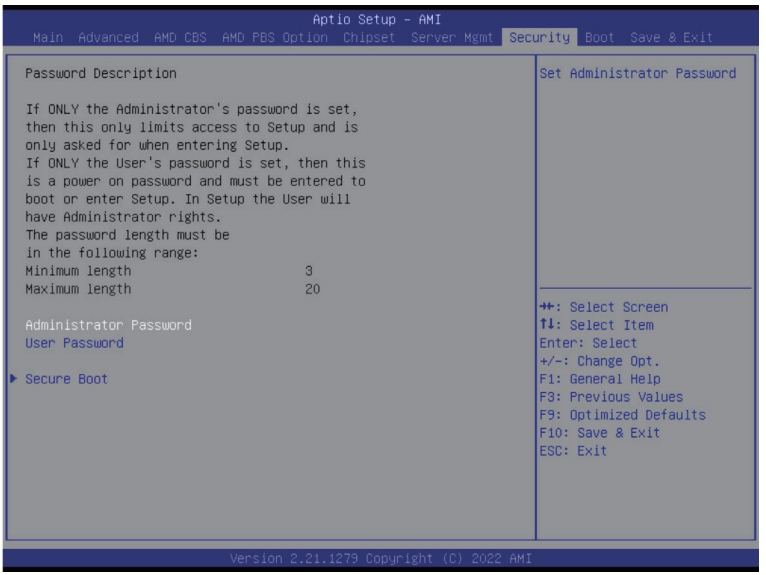

There are two types of passwords that you can set:

- Administrator Password

  Entering this password will allow the user to access and change all settings in the Setup Utility.

- User Password

  Entering this password will restrict a user's access to the Setup menus. To enable or disable this field, a Administrator Password must first be set. A user can only access and modify the System Time, System Date, and Set User Password fields.

Parameter	Description
Administrator Password	Press [Enter] to configure the administrator password.
User Password	Press [Enter] to configure the user password.
Secure Boot	Press [Enter] to configure advanced items.

5-7-1 Secure Boot

The Secure Boot feature is applicable if supported by your Operating System.

If your Operating System is not supporting Secure Boot, the system will hang when starting the Operating System.

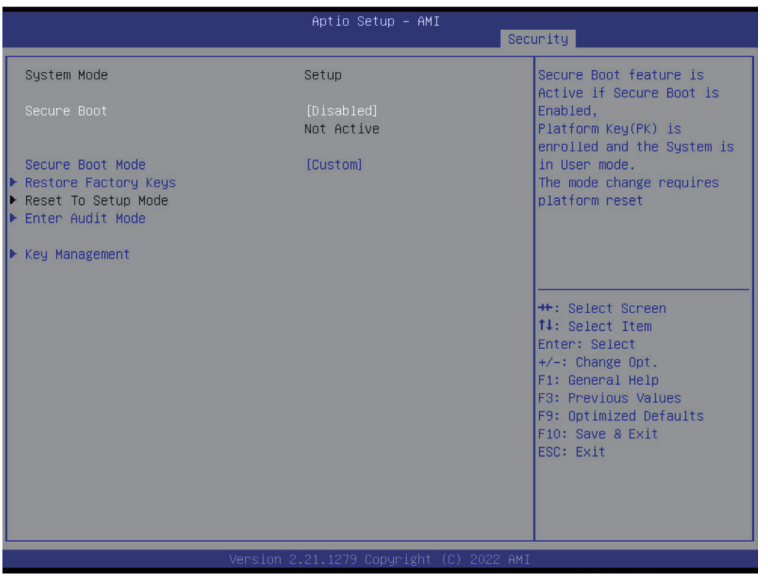

Parameter	Description
System Mode	Displays if the system is in User mode or Setup mode.
Secure Boot	Enable/ Disable the Secure Boot function. Options available: Enabled, Disabled. Default setting is **Disabled**.
Secure Boot Mode(Note)	Secure Boot requires all the applications that are running during the booting process to be pre-signed with valid digital certificates. This way, the system knows all files being loaded before the Operating System loads to the login screen have not been tampered with. When set to Standard, it will automatically load the Secure Boot keys form the BIOS databases. When set to Custom, you can customize the Secure Boot settings and manually load its keys from the BIOS database. Options available: Standard, Custom. Default setting is **Standard**.
Restore Factory Keys	Forces the system to user mode and installs factory default Secure Boot key database.
Reset To Setup Mode	Press [Enter] to reset the system mode to Setup mode.
Enter Audit Mode	Press [Enter] to set the system mode to audit mode.

(Note) Advanced items prompt when this item is set to **Custom**.

Parameter	Description
Key Management	Press [Enter] to configure advanced items. **Please note that this item is configurable when Secure Boot Mode is set to Custom.** ◆ Factory Key Provision – Allows to provision factory default Secure Boot keys when system is in Setup Mode. – Options available: Enabled, Disabled. Default setting is **Disabled**. ◆ Restore Factory Keys – Installs all factory default keys. It will force the system in User Mode. – Options available: Yes, No. ◆ Enroll Efi Image – Press [Enter] to enroll SHA256 hash of the binary into Authorized Signature Database (db). ◆ Secure Boot variable – Displays the current status of the variables used for secure boot. ◆ Platform Key (PK) – Displays the current status of the Platform Key (PK). – Press [Enter] to configure a new PK. – Options available: Update. ◆ Key Exchange Keys (KEK) – Displays the current status of the Key Exchange Key Database (KEK). – Press [Enter] to configure a new KEK or load additional KEK from storage devices. – Options available: Update, Append. ◆ Authorized Signatures (DB) – Displays the current status of the Authorized Signature Database. – Press [Enter] to configure a new DB or load additional DB from storage devices. – Options available: Update, Append. ◆ Forbidden Signatures (DBX) – Displays the current status of the Forbidden Signature Database. – Press [Enter] to configure a new dbx or load additional dbx from storage devices. – Options available: Update, Append. ◆ Authorized TimeStamps (DBT) – Displays the current status of the Authorized TimeStamps Database. – Press [Enter] to configure a new DBT or load additional DBT from storage devices. – Options available: Update, Append. ◆ OsRecovery Signatures – Displays the current status of the OsRecovery Signature Database. – Press [Enter] to configure a new OsRecovery Signature or load additional OsRecovery Signature from storage devices. – Options available: Update, Append.

5-8 Boot Menu

The Boot menu allows you to set the drive priority during system boot-up. BIOS setup will display an error message if the legacy drive(s) specified is not bootable.

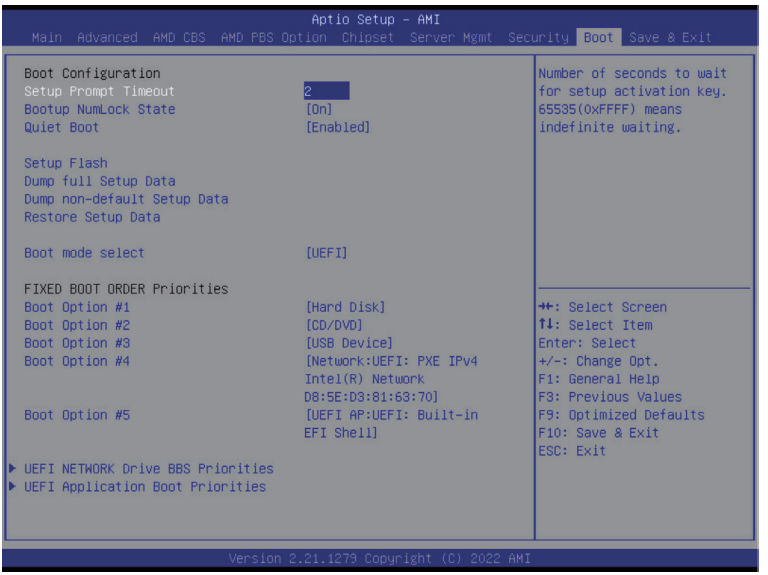

Parameter	Description
Boot Configuration	
Setup Prompt Timeout	Number of seconds to wait for setup activation key. 65535 (0xFFFF) means indefinite waiting. Press the numeric keys to input the desired values.
Bootup NumLock State	Enable/Disable the Bootup NumLock function. Options available: On, Off. Default setting is **On**.
Quiet Boot	Enable/Disable showing the logo during POST. Options available: Enabled, Disabled. Default setting is **Enabled**.
Setup Flash	Press [Enter] to run setup flash.
Dump full Setup Data	Press [Enter] to dump full setup data to file.
Dump non-default Setup Data	Press [Enter] to dump non-default setup data to file.
Restore Setup Data	Press [Enter] to restore setup data from file (cJson format).
Boot mode select	Selects the boot mode. Options available: LEGACY, UEFI. Default setting is **UEFI**.

Parameter	Description
FIXED BOOT ORDER Priorities	
Boot Option #1 / #2 / #3 / #4 / #5	Press [Enter] to configure the boot priority. By default, the server searches for boot devices in the following sequence: 1. Hard drive. 2. CD-COM/DVD drive. 3. USB device. 4. Network. 5. UEFI.
UEFI Network Drive BBS Priorities	Press [Enter] to configure the boot priority.
UEFI Application Boot Priorities	Press [Enter] to configure the boot priority.

5-9 Save & Exit Menu

The Save & Exit menu displays the various options to quit from the BIOS setup. Highlight any of the exit options then press <Enter>.

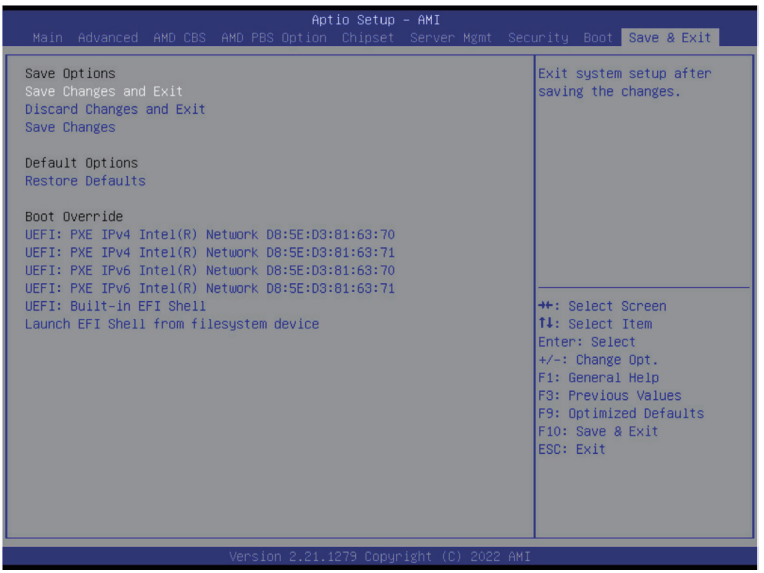

Parameter	Description
Save Options	
Save Changes and Exit	Saves changes made and closes the BIOS setup. Options available: Yes, No.
Discard Changes and Exit	Discards changes made and exits the BIOS setup. Options available: Yes, No.
Save Changes	Saves changes done so far to any of the setup options. Options available: Yes, No.
Default Options	
Restore Defaults	Loads the default settings for all BIOS setup parameters. Setup Defaults are quite demanding in terms of resources consumption. If you are using low-speed memory chips or other kinds of low-performance components and you choose to load these settings, the system might not function properly. Options available: Yes, No.
Boot Override	Press [Enter] to configure the device as the boot-up drive.
Launch EFI Shell from filesystem device	Attempts to Launch EFI Shell application (Shell.efi) from one of the available file system devices.

5-10 BIOS Recovery

The system has an embedded recovery technique. In the event that the BIOS becomes corrupt the boot block can be used to restore the BIOS to a working state. To restore your BIOS, please follow the instructions listed below:

Recovery Instruction:

1. Copy the XXX.rom to USB diskette.
2. Setting BIOS Recovery jump to enabled status.
3. Boot into BIOS recovery.
4. Run Proceed with flash update.
5. BIOS updated.

